Amplificadores Operacionales

El amplificador operacional monolítico (AO), es el circuito integrado más ampliamente conocido e utilizado en el diseño en electrónica analógica. Fue introducido en el mercado en la década de 1960, los AOs se encuentran en los más diversos diseños de sistemas electrónicos analógicos.

Amplificador Operacional Ideal

Generador de tensión
controlado por tensión

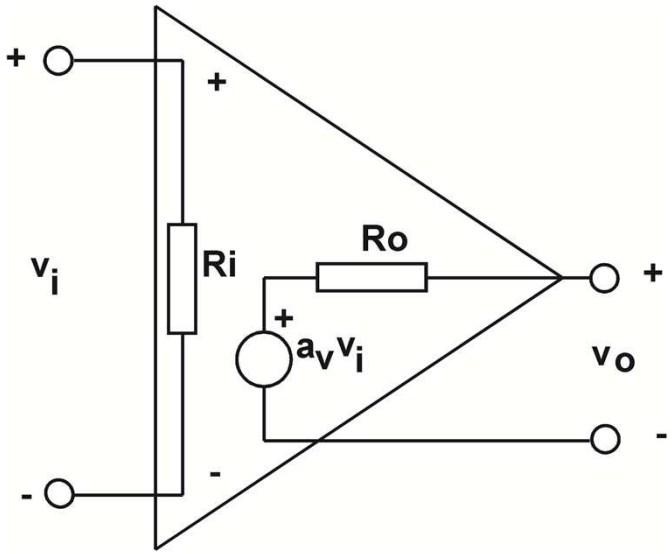

$a_v \to \infty$

$R_i \to \infty$

$R_0 \to 0$

$BW \to \infty$

.....

Amplificador Operacional Ideal

Configuración inversora

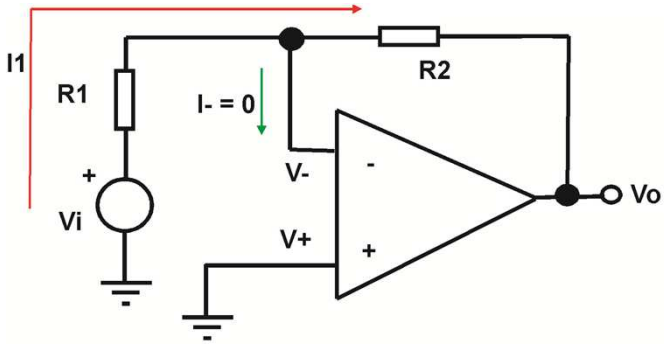

$$V^+ = V^- = 0 \qquad I^- = 0$$

$$I_1 = \frac{V_i}{R_1} \qquad V_0 = -I_1 R_2$$

$$A_v = \frac{V_o}{V_i} = -\frac{R_2}{R_1}$$

Configuración no inversora

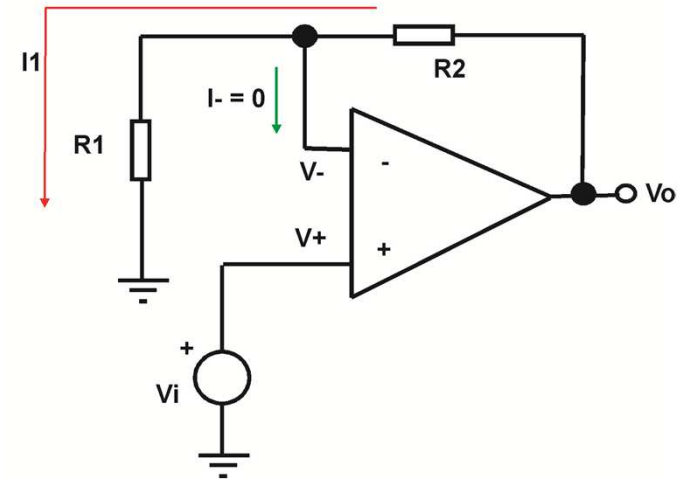

$$V_i = V^+ = V^- \qquad I_- = 0$$

$$I_1 = \frac{V_i}{R_1} \qquad V_o = I_1(R_1 + R_2)$$

$$A_v = \frac{V_o}{V_i} = 1 + \frac{R_2}{R_1}$$

Amplificador Operacional Real

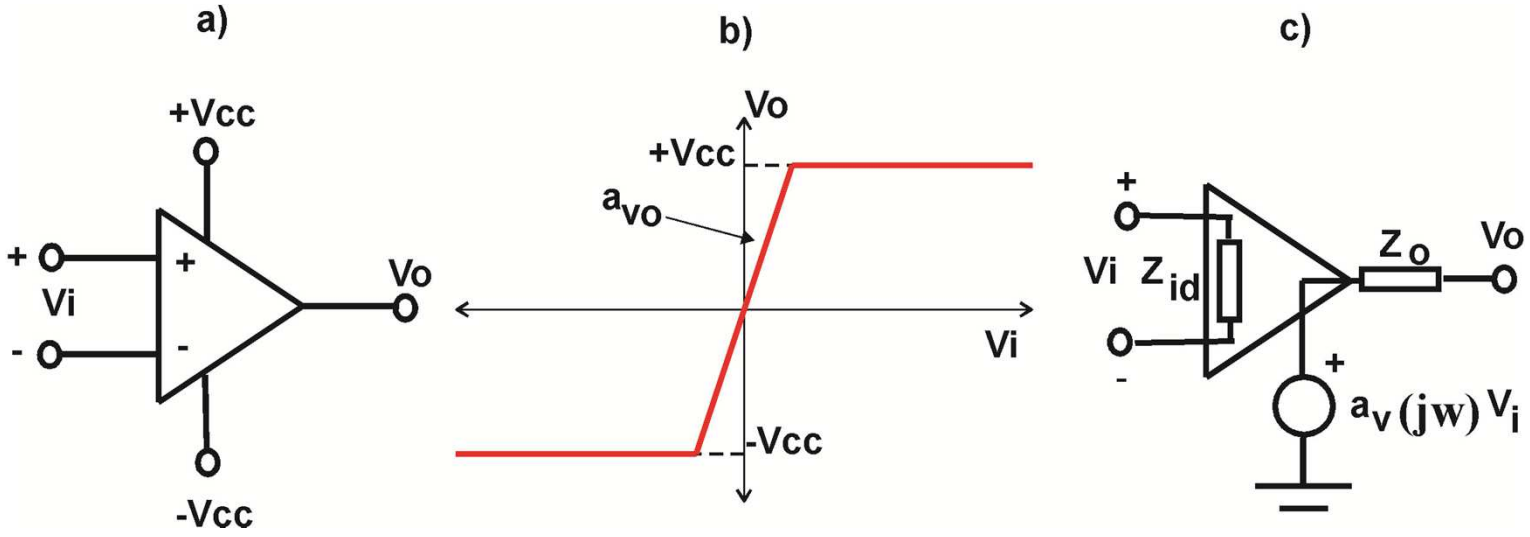

Modelo simplificado de Amplificador operacional real:

a) Diagrama esquemático, b) transferencia y c) circuito equivalente

Amplificador Operacional Real

LINEAR TECHNOLOGY

LT1001
Precision Operational Amplifier

LT1001

ABSOLUTE MAXIMUM RATINGS

(Note 1)

Supply Voltage ..... ±22V
Differential Input Voltage ..... ±30V
Input Voltage ..... ±22V
Output Short Circuit Duration ..... Indefinite

Operating Temperature Range
LT1001AM/LT1001M (OBSOLETE) .. –55°C to 150°C
LT1001AC/LT1001C ..... 0°C to 125°C
Storage: All Devices ..... –65°C to 150°C
Lead Temperature (Soldering, 10 sec.) ..... 300°C

PACKAGE/ORDER INFORMATION

	ORDER PART NUMBER
H PACKAGE METAL CAN	LT1001AMH/883 LT1001MH LT1001ACH LT1001CH
OBSOLETE PACKAGE	

	ORDER PART NUMBER
N8 PACKAGE 8 PIN PLASTIC DIP S8 PACKAGE 8 PIN PLASTIC SO	LT1001ACN8 LT1001CN8 LT1001CS8
	S8 PART MARKING
	1001

	ORDER PART NUMBER
J8 PACKAGE 8 PIN HERMETIC DIP	LT1001AMJ8/883 LT1001MJ8 LT1001ACJ8 LT1001CJ8
OBSOLETE PACKAGE	

Consult LTC Marketing for parts specified with wider operating temperature ranges.

$a_{vo} = 117{,}5dB$

$f_1 \cong 1Hz$

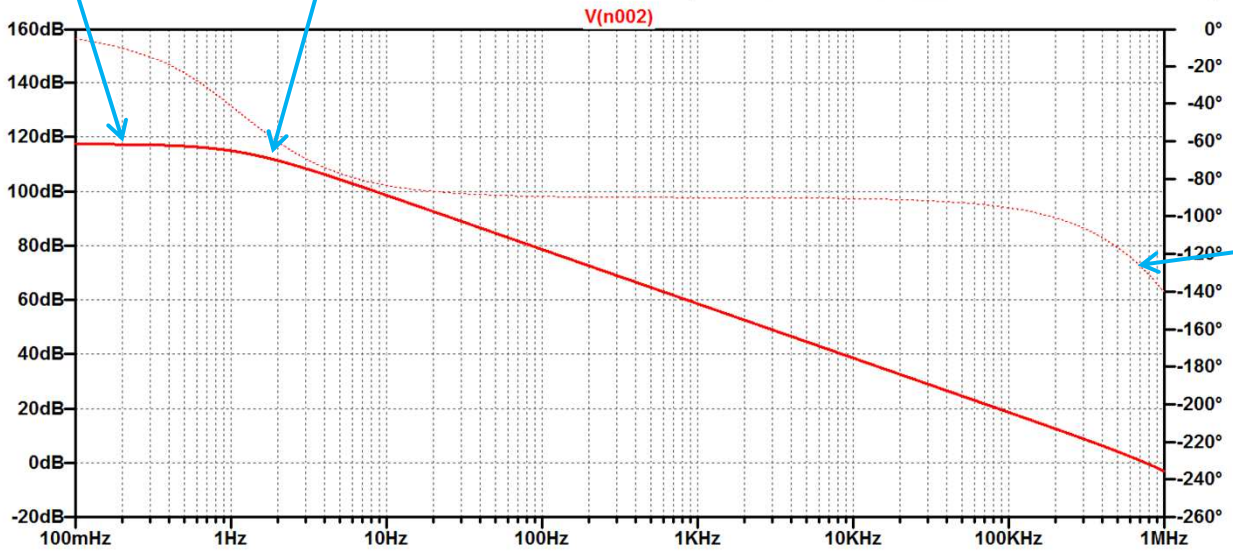

$M_{\emptyset} \cong 45°$

AO Real – Configuración no inversora

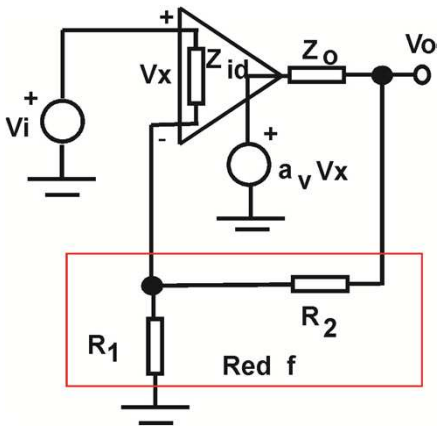

Serie - Paralelo

$$h_{11} = R_1 \| R_2 \qquad \boxed{h_{12} = f = \frac{R_1}{R_1 + R_2}}$$

$$h_{22} = \frac{1}{R_1 + R_2}$$

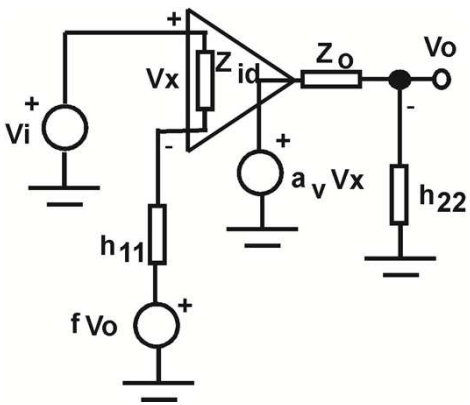

$$a = \left.\frac{v_0}{v_i}\right|_{f=0} = \frac{{h_{22}}^{-1}}{{h_{22}}^{-1} + Z_0} a_v \frac{Z_{id}}{Z_{id} + h_{11}}$$

$$A = \frac{v_0}{v_i} = \frac{a}{1 + af}$$

$$si \quad T = af \gg 1 \rightarrow \boxed{A \cong \frac{1}{f} = 1 + \frac{R_2}{R_1}}$$

AO Real - Configuración inversora

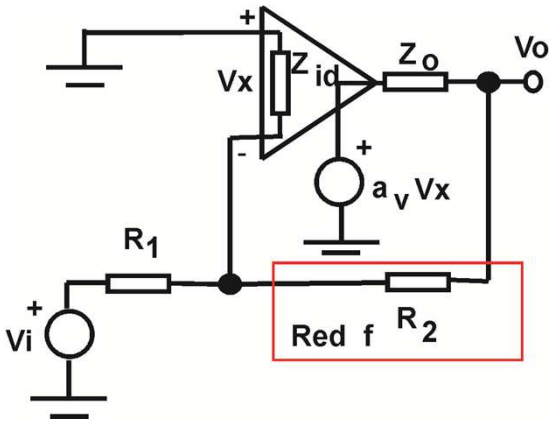

Paralelo - Paralelo

$$y_{11} = \frac{1}{R_2} \qquad \boxed{y_{12} = f_y = -\frac{1}{R_2}}$$

$$y_{22} = \frac{1}{R_2}$$

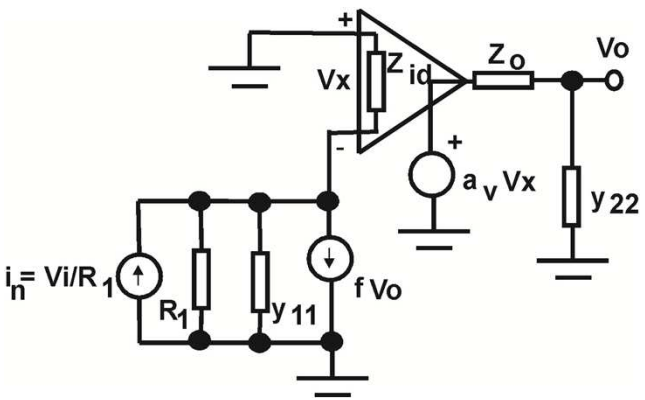

$$a_z = \left.\frac{v_0}{i_n}\right|_{f_y=0} = \frac{{y_{22}}^{-1}}{{y_{22}}^{-1} + Z_0} a_v R_1 \,\|{y_{11}}^{-1}\| Z_{id}$$

$$A_z = \frac{v_0}{i_n} = \frac{a_z}{1 + f_y a_z} \qquad si \qquad T = f_y a_z \gg 1$$

$$\rightarrow A_z \cong \frac{1}{f_y} = -R_2 \quad \rightarrow \boxed{\frac{v_0}{v_i} = \frac{v_0}{i_n}\frac{i_n}{v_i} = -\frac{R_2}{R_1}}$$

Estructura interna de un AO Real

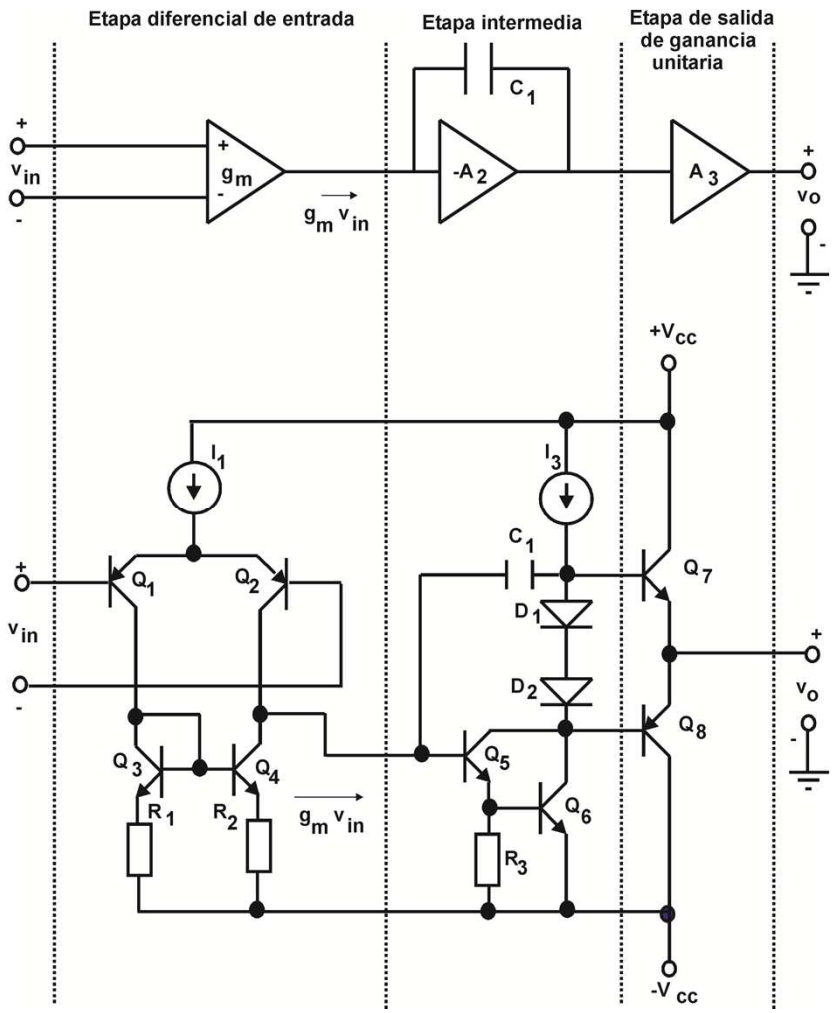

Estructura interna de un AO Real

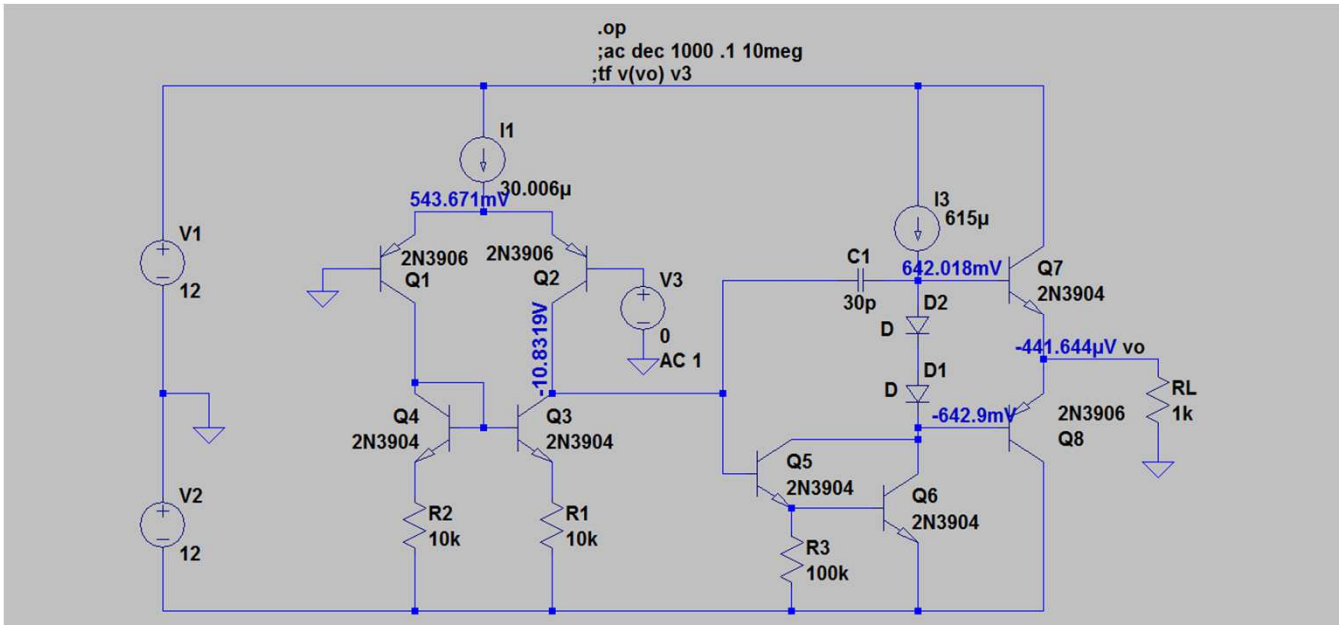

--- Transfer Function ---

Transfer_function:	1.29641e+006	transfer
v3#Input_impedance:	628198	impedance
output_impedance_at_V(vo):	174.11	impedance

Estructura interna de un AO Real

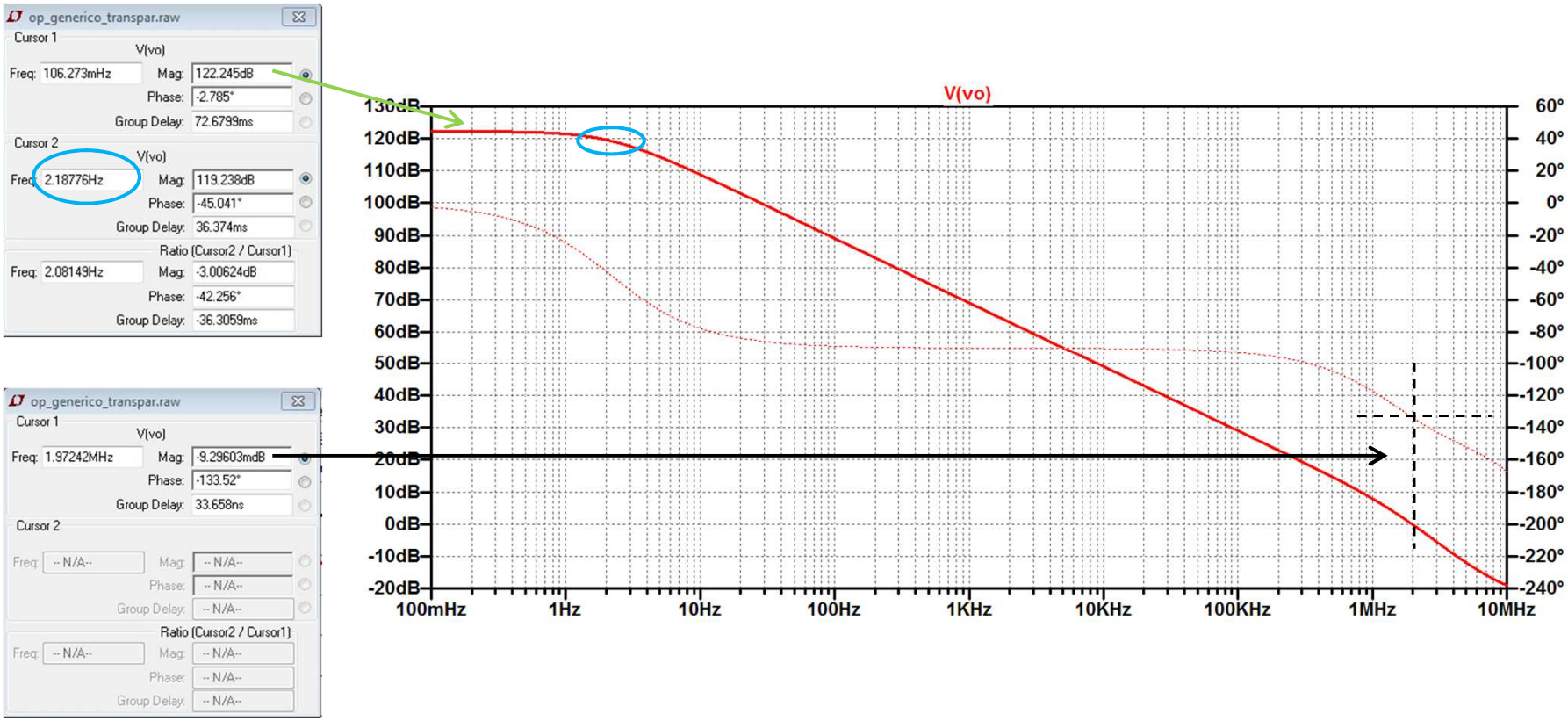

Desajuste de tensión

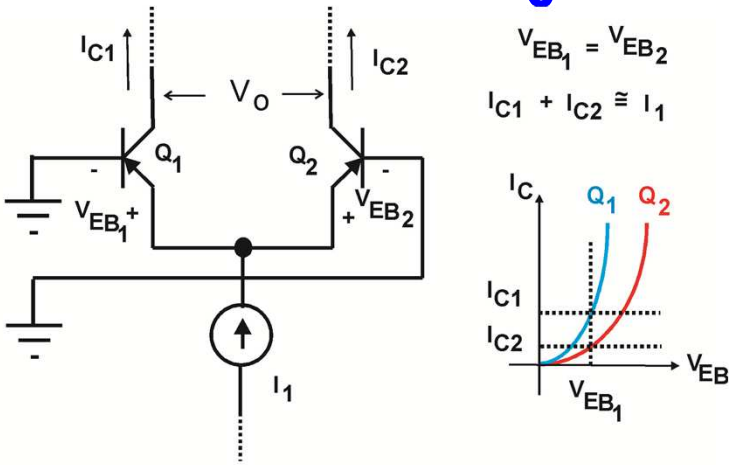

Con las entradas a tierra $V_o \neq 0$ debido al desajuste de Q_1 y Q_2

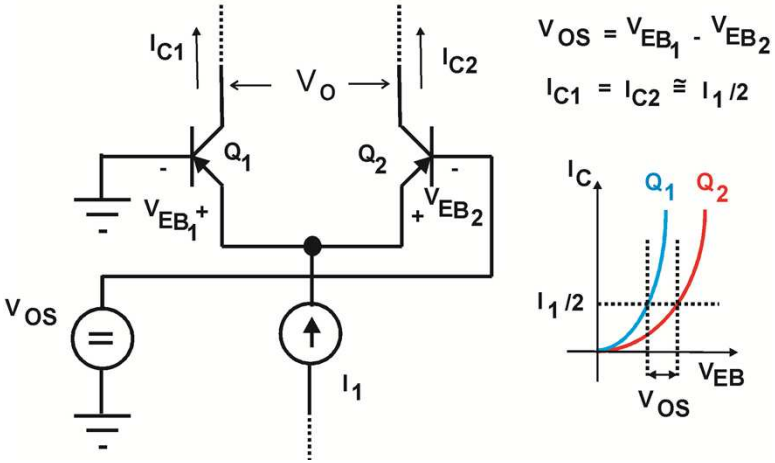

V_{OS} es la tensión a la entrada que asegura $V_o = 0$

V_{OS} Tensión de desajuste de entrada

Desajuste de tensión

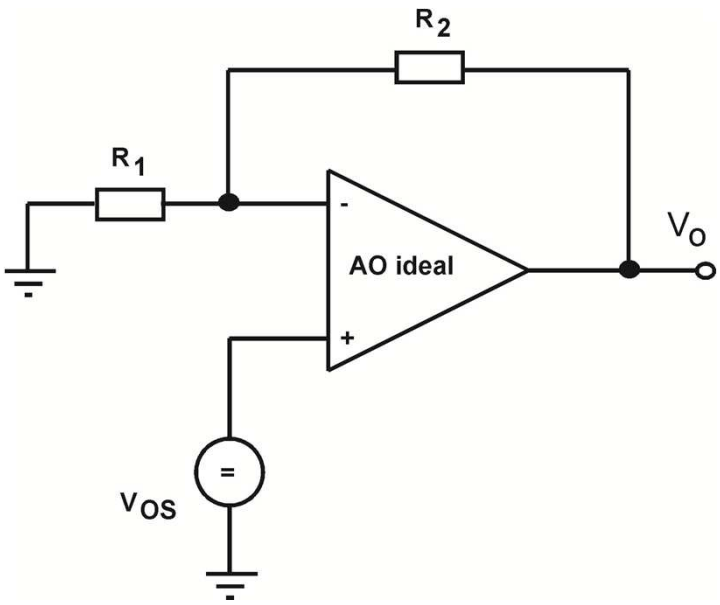

Tensión de salida debido al desajuste de tensión

$$V_o = \pm V_{OS}\left(1 + \frac{R_2}{R_1}\right)$$

Desajuste de corriente

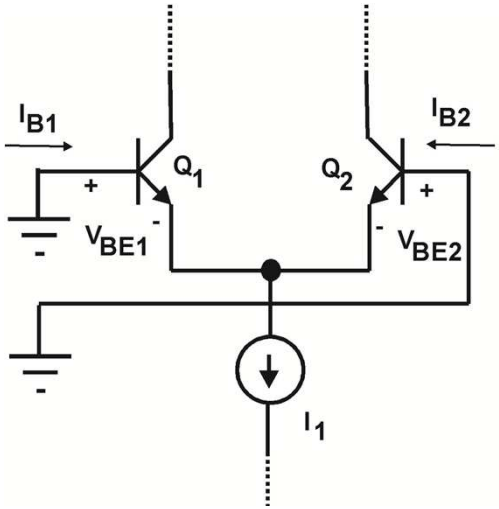

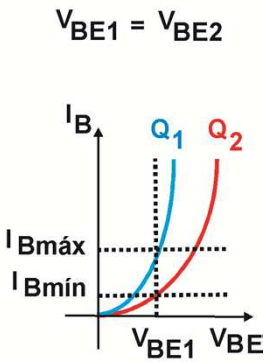

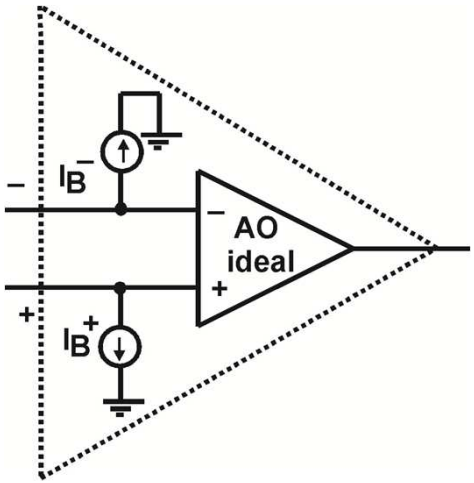

$$I_{OS} = I_{Bmáx} - I_{Bmín}$$

$$I_B = \frac{I_{Bmáx} + I_{Bmín}}{2}$$

$$I_{Bmáx} = I_B + \frac{I_{OS}}{2} \qquad I_{Bmín} = I_B - \frac{I_{OS}}{2}$$

Corriente de desajuste

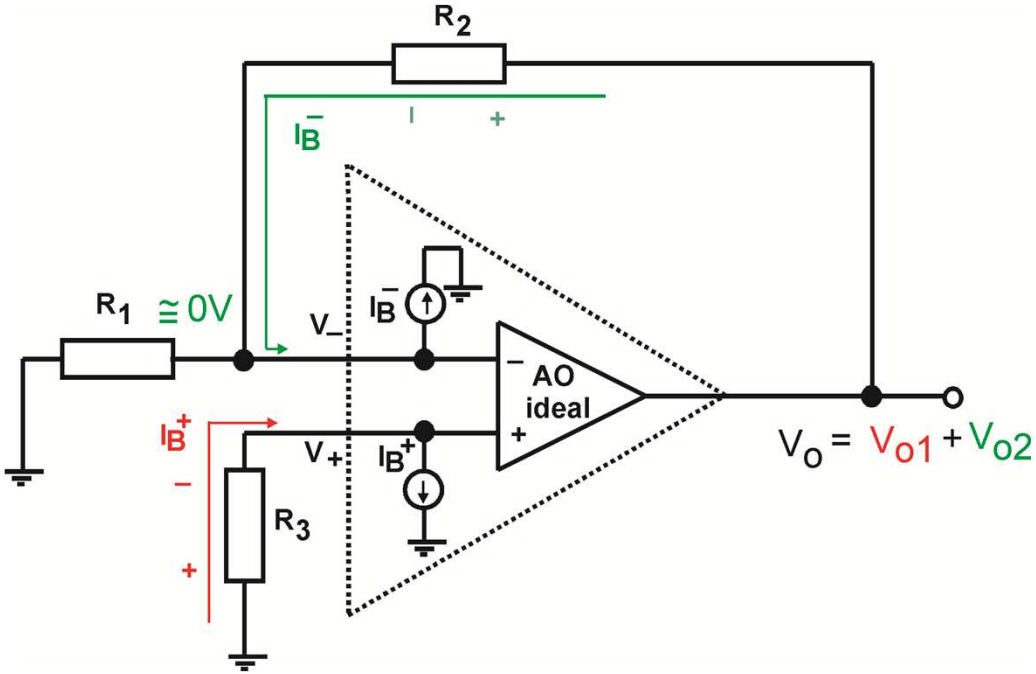

$$V_o = -I_B{}^{+}R_3\left(1+\frac{R_2}{R_1}\right)+I_B{}^{-}R_2$$

$$Si\ R_3 = 0 \rightarrow V_o = I_B{}^{-}R_2$$

$$Si\ R_3 = R_1 \| R_2 \rightarrow V_o = \left(I_B{}^{-} - I_B{}^{+}\right)R_2$$

Modelo completo de desajuste

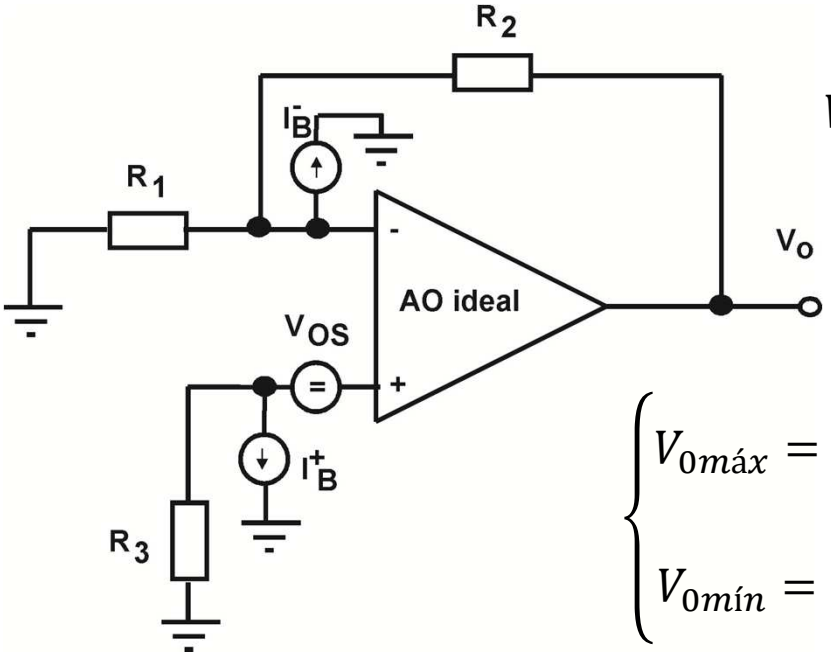

$$V_o = \pm V_{OS}\left(1+\frac{R_2}{R_1}\right) - I_B{}^{+}R_3\left(1+\frac{R_2}{R_1}\right) + I_B{}^{-}R_2$$

$$\begin{cases} V_{0máx} = +V_{OS}\left(1+\frac{R_2}{R_1}\right) - I_{Bmín}R_3\left(1+\frac{R_2}{R_1}\right) + I_{Bmáx}R_2 \\ V_{0mín} = -V_{OS}\left(1+\frac{R_2}{R_1}\right) - I_{Bmáx}R_3\left(1+\frac{R_2}{R_1}\right) + I_{Bmín}R_2 \end{cases}$$

$$Si\ R_3 = R_1 \| R_2 \rightarrow \begin{cases} V_{omáx} = +V_{OS}\left(1+\frac{R_2}{R_1}\right) + I_{OS}R_2 \\ V_{omín} = -V_{OS}\left(1+\frac{R_2}{R_1}\right) - I_{OS}R_2 \end{cases}$$

Compensación del desajuste

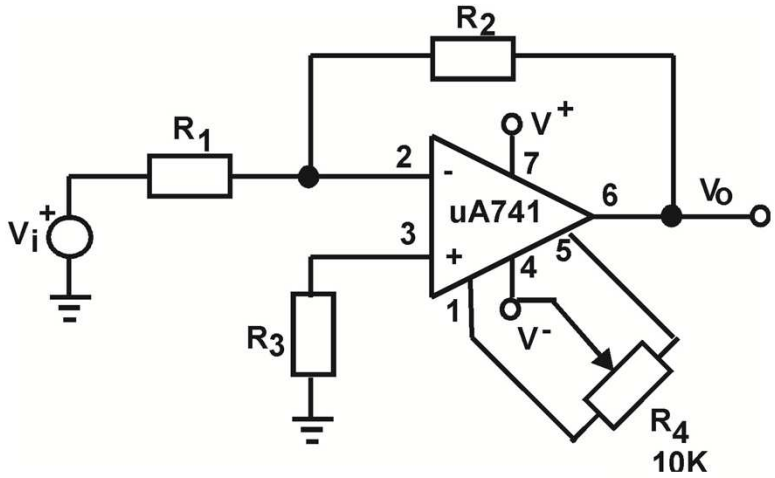

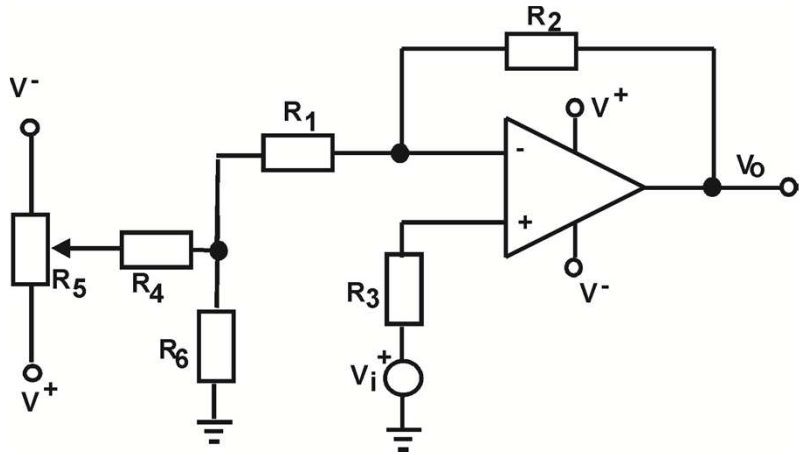

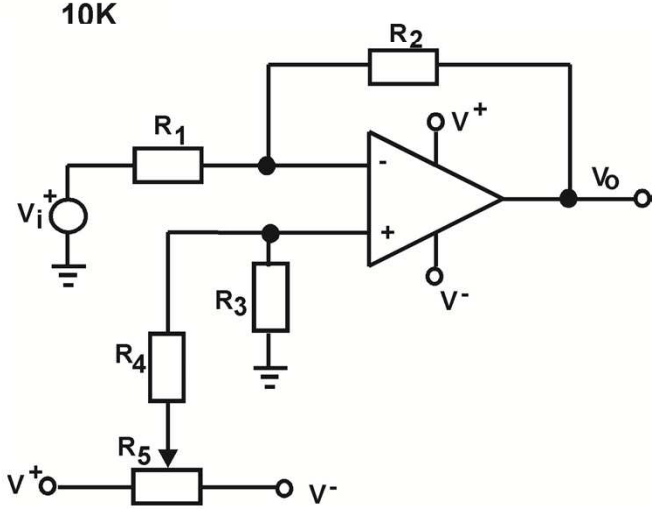

Rapidez de respuesta (Slew Rate)

En un AO la rapidez del cambio de la señal de salida está limitada a un máximo. Esta característica puede producir distorsión no lineal y se denomina Slew Rate (SR). Se suele especificar en V/μseg

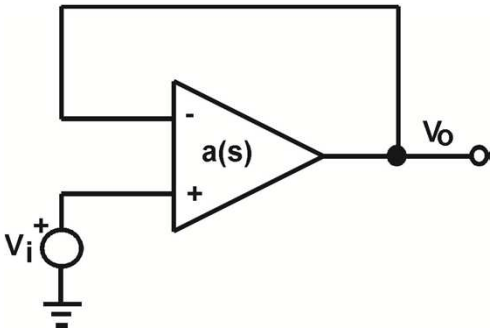

$$SR = \left.\frac{dV_o}{dt}\right|_{máx}$$

$$a(s) = \frac{a_o}{1 + \frac{s}{w_1}} \qquad A(s) \cong \frac{1}{1 + \frac{s}{w_f}}$$

$$w_f = w_1(1 + a_0)$$

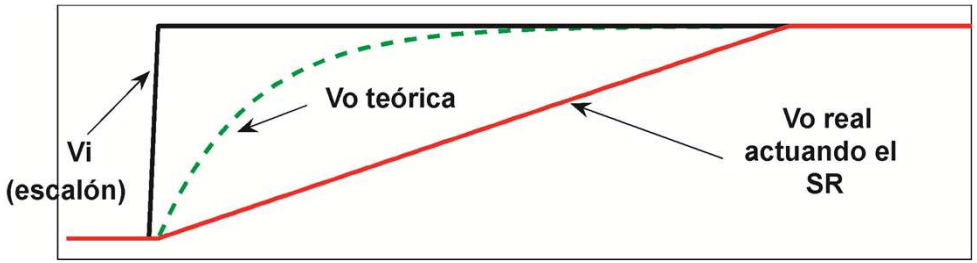

Rapidez de respuesta (Slew Rate)

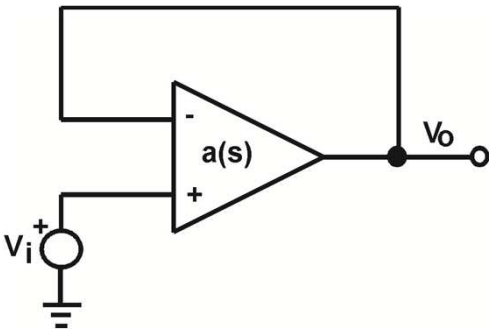

$$V_i = V_0 = \widehat{V}_i \sin wt \qquad \frac{dV_0}{dt} = w\widehat{V}_i \cos wt$$

$$SR = \left.\frac{dV_o}{dt}\right|_{máx} \geq 2\pi f \widehat{V}_i \qquad f \leq \frac{SR}{2\pi \widehat{V}_i}$$

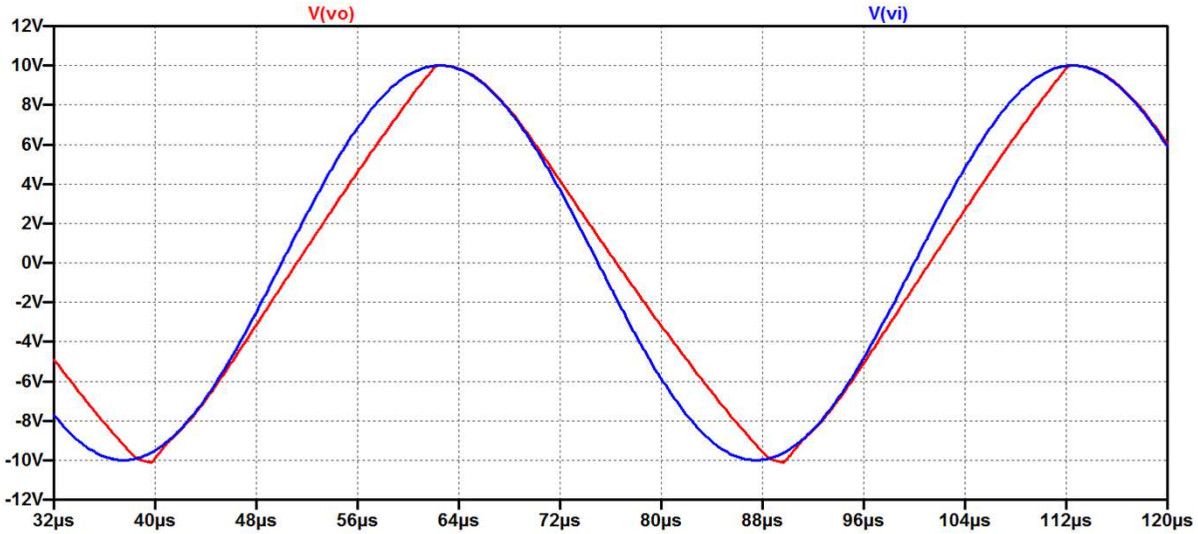

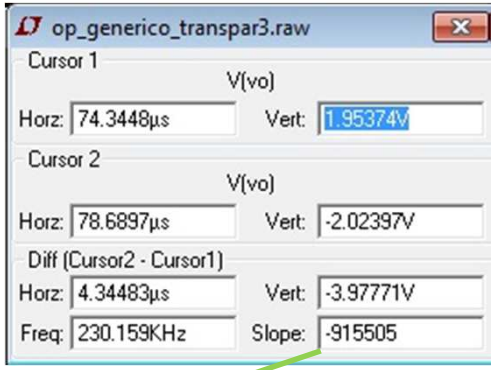

$$SR = 0{,}915505\ {}^{V}/_{\mu s}$$

Rapidez de respuesta (Slew Rate)

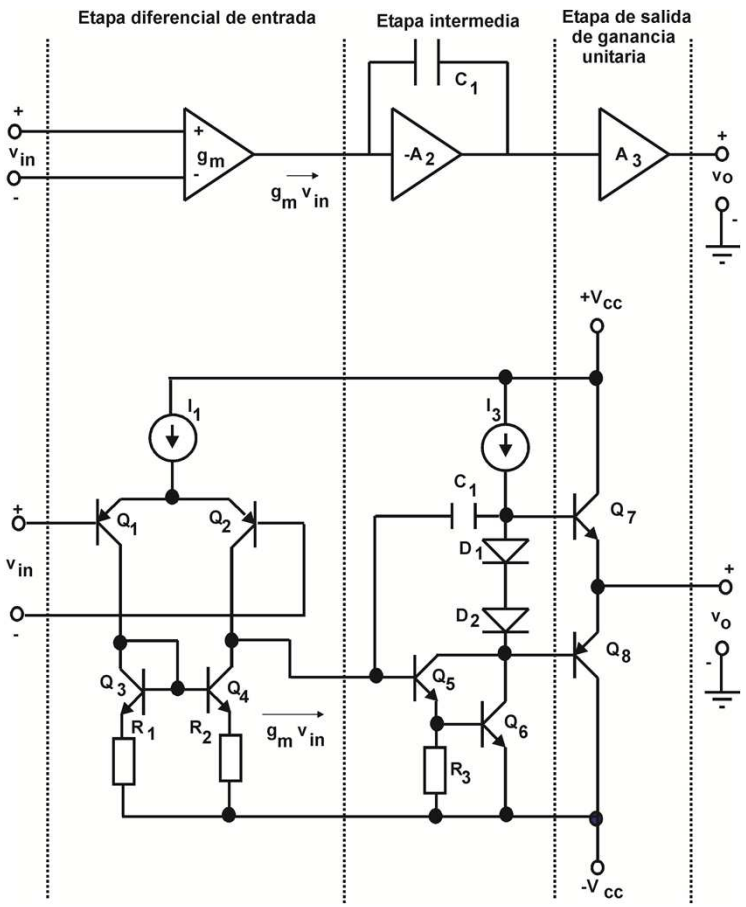

$$I_x = g_m v_{in}$$

$$V_0 \cong V_{C1}$$

$$\frac{dV_0}{dt} \cong \frac{dV_{C1}}{dt} = \frac{I_x}{C_1}$$

$$Como\ I_x\ satura\ en\ I_1$$

$$SR = \left.\frac{dV_0}{dt}\right|_{máx} \cong \frac{I_1}{C_1}$$

$$SR \cong \frac{30{,}006\mu A}{30pF} = 1{,}0002\ {}^{V}/_{\mu s}$$

Hojas de datos, LM741

National Semiconductor

August 2000

LM741 Operational Amplifier

LM741
Operational Amplifier

General Description

The LM741 series are general purpose operational amplifiers which feature improved performance over industry standards like the LM709. They are direct, plug-in replacements for the 709C, LM201, MC1439 and 748 in most applications.

The amplifiers offer many features which make their application nearly foolproof: overload protection on the input and output, no latch-up when the common mode range is exceeded, as well as freedom from oscillations.

The LM741C is identical to the LM741/LM741A except that the LM741C has their performance guaranteed over a 0°C to +70°C temperature range, instead of −55°C to +125°C.

Features

Connection Diagrams

Metal Can Package

Note 1: LM741H is available per JM38510/10101

Order Number LM741H, LM741H/883 (Note 1), LM741AH/883 or LM741CH
See NS Package Number H08C

Dual-In-Line or S.O. Package

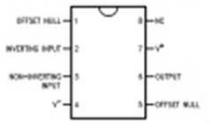

Order Number LM741J, LM741J/883, LM741CN
See NS Package Number J08A, M08A or N08E

Ceramic Flatpak

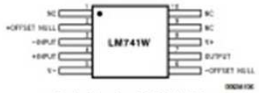

Order Number LM741W/883
See NS Package Number W10A

Typical Application

Offset Nulling Circuit

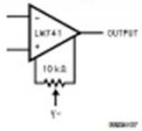

© 2004 National Semiconductor Corporation DS009341

LM741

Electrical Characteristics (Note 5) (Continued)

Note 3: For operation at elevated temperatures, these devices must be derated based on thermal resistance, and T_j max. (listed under "Absolute Maximum Ratings"). $T_j = T_A + (\theta_{jA} P_D)$.

Thermal Resistance	Cerdip (J)	DIP (N)	H08 (H)	SO-8 (M)
θ_{jA} (Junction to Ambient)	100°C/W	100°C/W	170°C/W	195°C/W
θ_{jC} (Junction to Case)	N/A	N/A	25°C/W	N/A

Note 4: For supply voltages less than ±15V, the absolute maximum input voltage is equal to the supply voltage.

Note 5: Unless otherwise specified, these specifications apply for $V_S = \pm 15V$, −55°C ≤ T_A ≤ +125°C (LM741/LM741A). For the LM741C/LM741E, these specifications are limited to 0°C ≤ T_A ≤ +70°C.

Note 6: Calculated value from: SR (MHz) = 0.35/Rise Time(μs).

Note 7: For military specifications see RETS741X for LM741 and RETS741AX for LM741A.

Note 8: Human body model, 1.5 kΩ in series with 100 pF.

Schematic Diagram

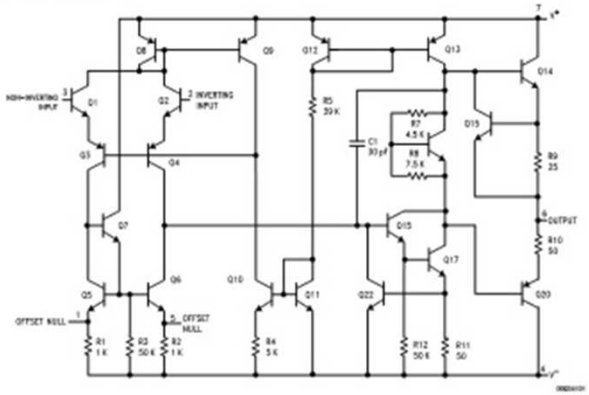

Hojas de datos, LM741

LM741

Absolute Maximum Ratings (Note 2)

If Military/Aerospace specified devices are required, please contact the National Semiconductor Sales Office/ Distributors for availability and specifications.

(Note 7)

	LM741A	LM741	LM741C
Supply Voltage	±22V	±22V	±18V
Power Dissipation (Note 3)	500 mW	500 mW	500 mW
Differential Input Voltage	±30V	±30V	±30V
Input Voltage (Note 4)	±15V	±15V	±15V
Output Short Circuit Duration	Continuous	Continuous	Continuous
Operating Temperature Range	−55°C to +125°C	−55°C to +125°C	0°C to +70°C
Storage Temperature Range	−65°C to +150°C	−65°C to +150°C	−65°C to +150°C
Junction Temperature	150°C	150°C	100°C
Soldering Information			
N-Package (10 seconds)	260°C	260°C	260°C
J- or H-Package (10 seconds)	300°C	300°C	300°C
M-Package			
Vapor Phase (60 seconds)	215°C	215°C	215°C
Infrared (15 seconds)	215°C	215°C	215°C

See AN-450 "Surface Mounting Methods and Their Effect on Product Reliability" for other methods of soldering surface mount devices.

ESD Tolerance (Note 8)	400V	400V	400V

Electrical Characteristics (Note 5)

Parameter	Conditions	LM741A Min	LM741A Typ	LM741A Max	LM741 Min	LM741 Typ	LM741 Max	LM741C Min	LM741C Typ	LM741C Max	Units
Input Offset Voltage	$T_A = 25°C$										
	$R_S \leq 10\ k\Omega$					1.0	5.0		2.0	6.0	mV
	$R_S \leq 50\Omega$		0.8	3.0							mV
	$T_{AMIN} \leq T_A \leq T_{AMAX}$										
	$R_S \leq 50\Omega$			4.0							mV
	$R_S \leq 10\ k\Omega$						6.0			7.5	mV
Average Input Offset Voltage Drift				15							μV/°C
Input Offset Voltage Adjustment Range	$T_A = 25°C$, $V_S = \pm 20V$	±10				±15			±15		mV
Input Offset Current	$T_A = 25°C$		3.0	30		20	200		20	200	nA
	$T_{AMIN} \leq T_A \leq T_{AMAX}$			70		85	500			300	nA
Average Input Offset Current Drift				0.5							nA/°C
Input Bias Current	$T_A = 25°C$		30	80		80	500		80	500	nA
	$T_{AMIN} \leq T_A \leq T_{AMAX}$			0.210			1.5			0.8	μA
Input Resistance	$T_A = 25°C$, $V_S = \pm 20V$	1.0	6.0		0.3	2.0		0.3	2.0		MΩ
	$T_{AMIN} \leq T_A \leq T_{AMAX}$, $V_S = \pm 20V$	0.5									MΩ
Input Voltage Range	$T_A = 25°C$							±12	±13		V
	$T_{AMIN} \leq T_A \leq T_{AMAX}$				±12	±13					V

LM741

Electrical Characteristics (Note 5) (Continued)

Parameter	Conditions	LM741A Min	LM741A Typ	LM741A Max	LM741 Min	LM741 Typ	LM741 Max	LM741C Min	LM741C Typ	LM741C Max	Units
Large Signal Voltage Gain	$T_A = 25°C$, $R_L \geq 2\ k\Omega$										
	$V_S = \pm 20V$, $V_O = \pm 15V$	50									V/mV
	$V_S = \pm 15V$, $V_O = \pm 10V$				50	200		20	200		V/mV
	$T_{AMIN} \leq T_A \leq T_{AMAX}$, $R_L \geq 2\ k\Omega$,										
	$V_S = \pm 20V$, $V_O = \pm 15V$	32									V/mV
	$V_S = \pm 15V$, $V_O = \pm 10V$				25			15			V/mV
	$V_S = \pm 5V$, $V_O = \pm 2V$	10									V/mV
Output Voltage Swing	$V_S = \pm 20V$										
	$R_L \geq 10\ k\Omega$	±16									V
	$R_L \geq 2\ k\Omega$	±15									V
	$V_S = \pm 15V$										
	$R_L \geq 10\ k\Omega$				±12	±14		±12	±14		V
	$R_L \geq 2\ k\Omega$				±10	±13		±10	±13		V
Output Short Circuit Current	$T_A = 25°C$	10	25	35		25			25		mA
	$T_{AMIN} \leq T_A \leq T_{AMAX}$	10		40							mA
Common-Mode Rejection Ratio	$T_{AMIN} \leq T_A \leq T_{AMAX}$										
	$R_S \leq 10\ k\Omega$, $V_{CM} = \pm 12V$				70	90		70	90		dB
	$R_S \leq 50\Omega$, $V_{CM} = \pm 12V$	80	95								dB
Supply Voltage Rejection Ratio	$T_{AMIN} \leq T_A \leq T_{AMAX}$, $V_S = \pm 20V$ to $V_S = \pm 5V$										
	$R_S \leq 50\Omega$	86	96								dB
	$R_S \leq 10\ k\Omega$				77	96		77	96		dB
Transient Response	$T_A = 25°C$, Unity Gain										
Rise Time			0.25	0.8		0.3			0.3		μs
Overshoot			6.0	20		5			5		%
Bandwidth (Note 6)	$T_A = 25°C$	0.437	1.5								MHz
Slew Rate	$T_A = 25°C$, Unity Gain	0.3	0.7			0.5			0.5		V/μs
Supply Current	$T_A = 25°C$					1.7	2.8		1.7	2.8	mA
Power Consumption	$T_A = 25°C$										
	$V_S = \pm 20V$		80	150							mW
	$V_S = \pm 15V$					50	85		50	85	mW
LM741A	$V_S = \pm 20V$										
	$T_A = T_{AMIN}$			165							mW
	$T_A = T_{AMAX}$			135							mW
LM741	$V_S = \pm 15V$										
	$T_A = T_{AMIN}$					60	100				mW
	$T_A = T_{AMAX}$					45	75				mW

Note 2: "Absolute Maximum Ratings" indicate limits beyond which damage to the device may occur. Operating Ratings indicate conditions for which the device is functional, but do not guarantee specific performance limits.

Aplicaciones básicas

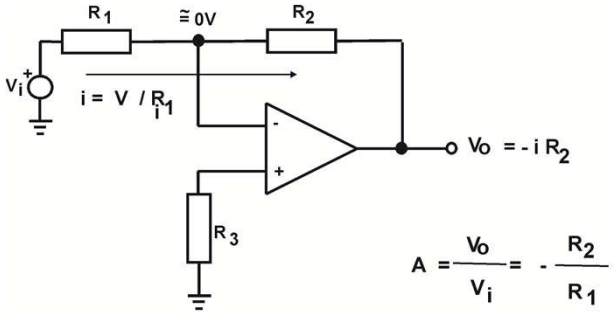

Amplificador Inversor

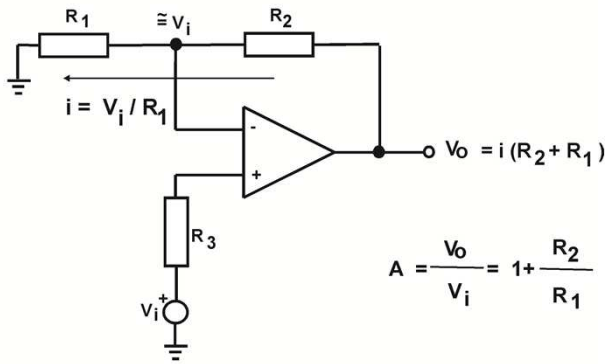

Amplificador no Inversor

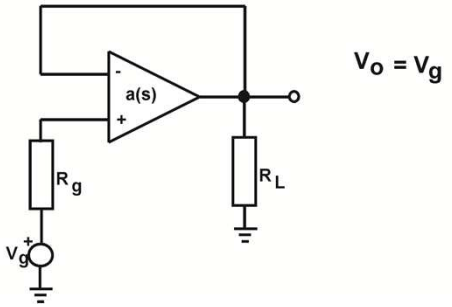

Seguidor de tensión

Aplicaciones. Sumador Ponderado

$$I_x = \sum_{i=1}^{n} I_i$$

$$V_0 = -R_x \sum_{i=1}^{n} \frac{V_i}{R_i}$$

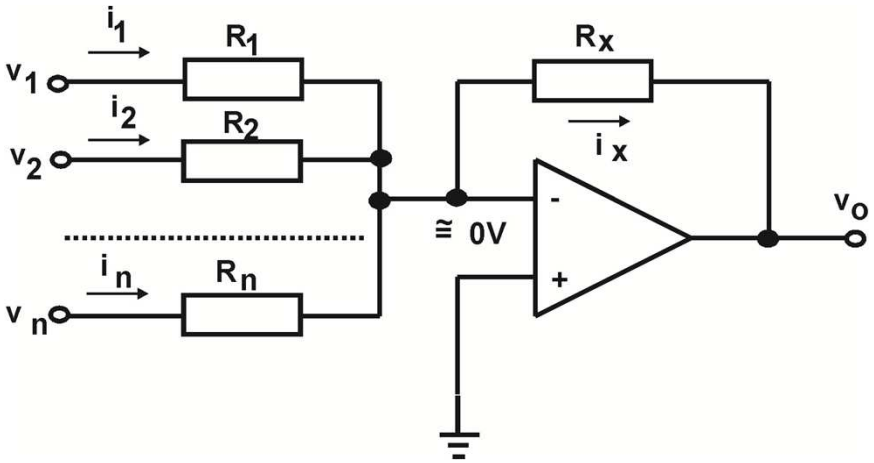

Particularmente si $R_1 = R_2 = \cdots\cdots = R_n = R_x$ el circuito se comportará como un sumador puro con inversión:

$$V_0 = -(V_1 + V_2 + \cdots + V_n)$$

Aplicaciones. Restador (Diferencial)

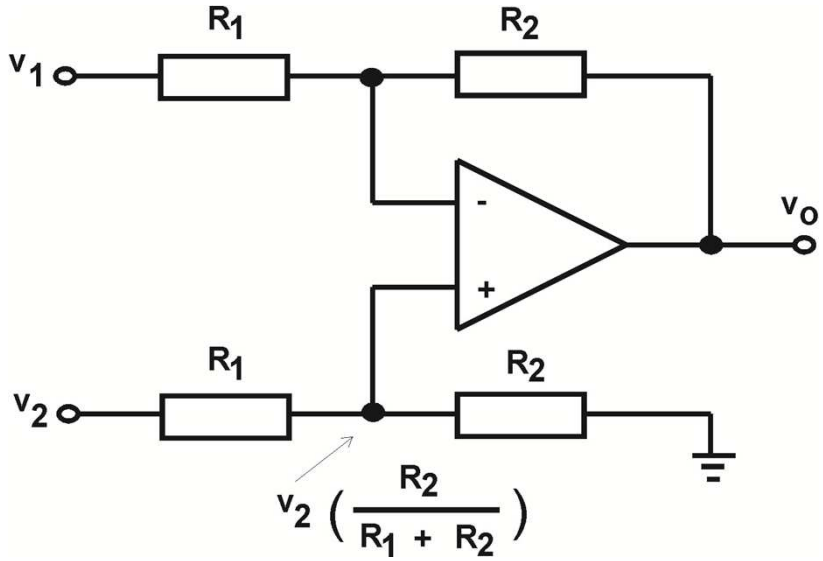

Aplicando superposición

$$V_0 = -V_1\frac{R_2}{R_1} + V_2\frac{R_2}{R_1+R_2}\left(1+\frac{R_2}{R_1}\right) = (V_2 - V_1)\frac{R_2}{R_1} \quad \rightarrow \quad \boxed{\frac{V_0}{V_1 - V_2} = -\frac{R_2}{R_1}}$$

Amplificador de Instrumentación

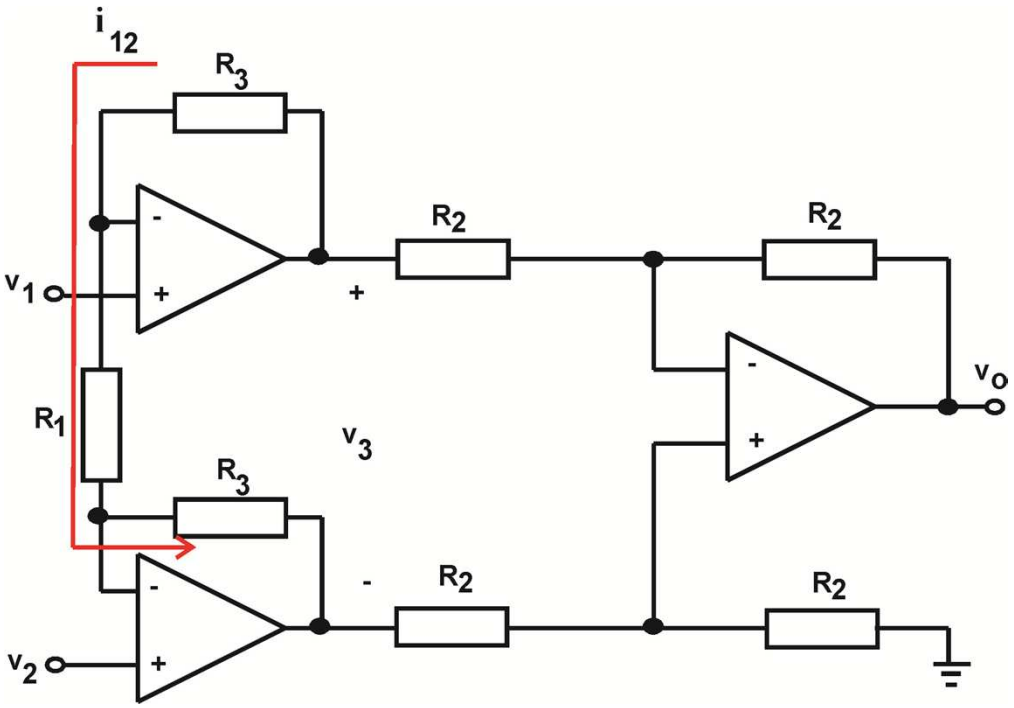

$$V_0 = -V_3$$

$$V_3 = i_{12}(R_1 + 2R_3)$$

$$i_{12} = \frac{(V_1 - V_2)}{R_1}$$

$$\boxed{\frac{V_o}{V_1 - V_2} = -\left(1 + \frac{2R_3}{R_1}\right)}$$

Impedancia de entrada alta y balanceada

Integrador

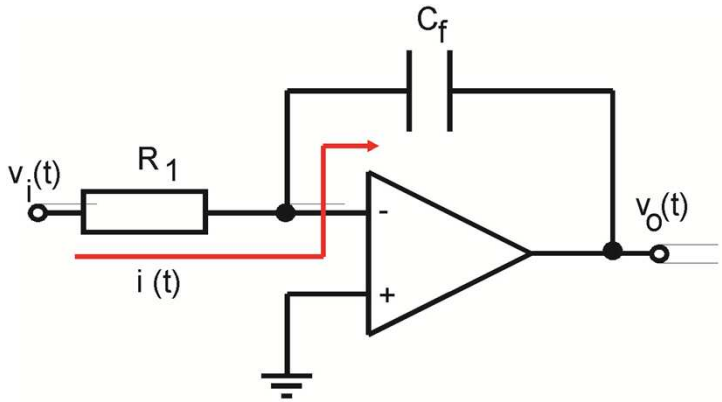

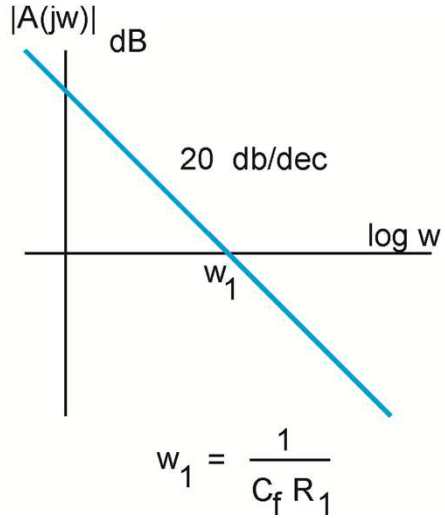

$$I(t) = \frac{V_i(t)}{R_1} = -C_f \frac{dV_o}{dt}$$

$$V_o(t) = -\frac{1}{R_1 C_f} \int_0^t V_i(t)\, dt + V_0(0)$$

$$A(jw) = \frac{V_o}{V_i}(jw) = -\frac{X_{C_f}}{R_1} = -\frac{1}{jwC_f R_1}$$

Integrador

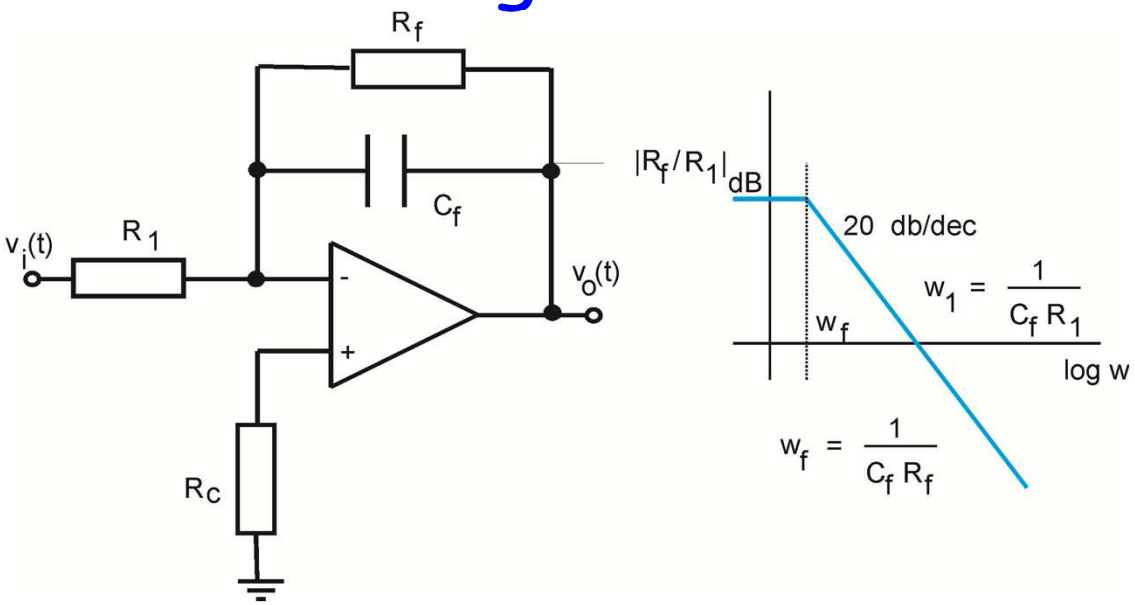

$$A(jw) = \frac{V_o}{V_i}(jw) = -\frac{X_{C_f} \| R_f}{R_1} = -\frac{\frac{R_f}{1 + jwC_f R_f}}{R_1} = -\frac{\frac{R_f}{R_1}}{1 + jwC_f R_f}$$

Para w >> w_f se comporta como integrador

Integrador

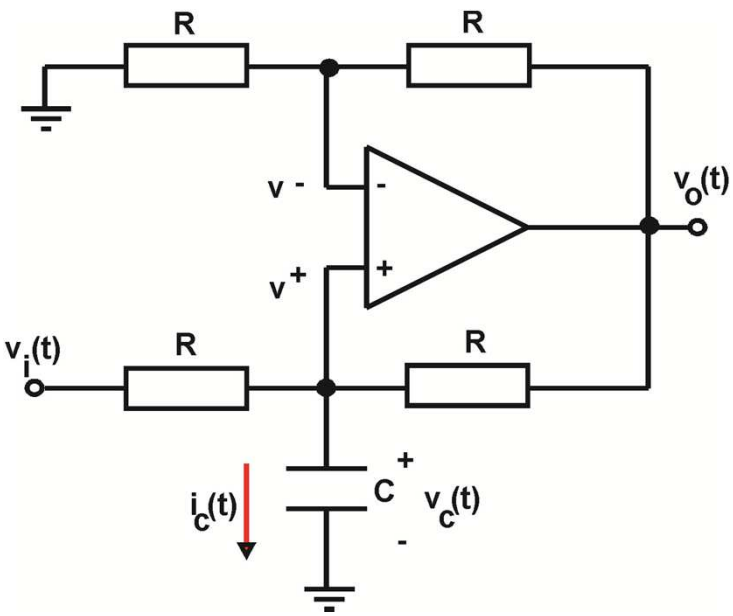

$$V_c(t) = V^+ = V^- = \frac{V_o(t)}{2}$$

$$I_c(t) + \frac{V_c(t) - V_i(t)}{R} + \frac{V_c(t) - V_0(t)}{R} = 0$$

$$I_c(t) + \frac{V_c(t)}{R} + \frac{V_c(t) - 2V_c(t)}{R} = \frac{V_i(t)}{R}$$

$$I_c(t) = \frac{V_i(t)}{R}$$

Fuente de corriente

$$V_o(t) = 2V_C(t) = \frac{2}{RC}\int_0^t V_i(t)dt + 2V_c(0)$$

$$A(jw) = \frac{V_o}{V_i}(jw) = \frac{2}{jwRC}$$

Derivador

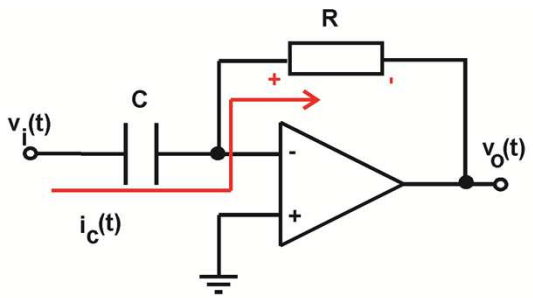

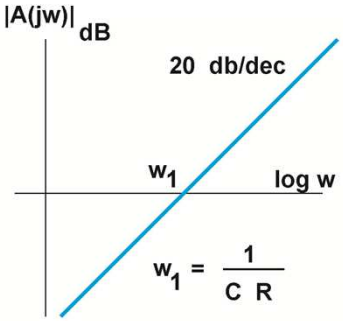

$$I_C(t) = -\frac{dV_i}{dt}$$

$$V_o(t) = -RC\frac{dV_i}{dt}$$

$$A(jw) = \frac{V_o}{V_i}(jw) = -jwRC$$

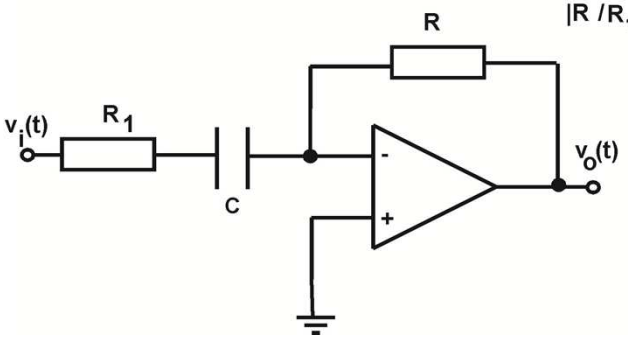

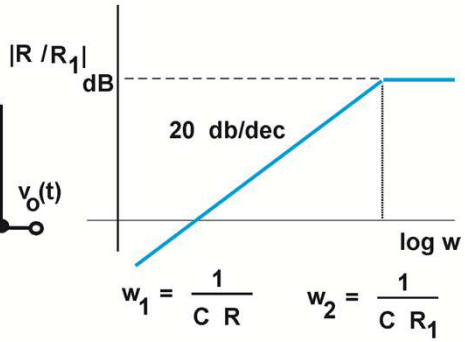

$$A(jw) = \frac{V_o}{V_i}(jw) = -\frac{jwCR}{1 + jwCR_1}$$

Para w << w_2 se comporta como derivador

Amplificador Inversor de C.A.

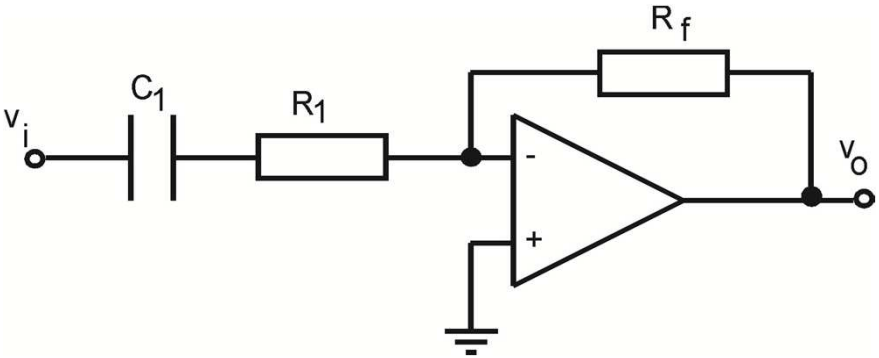

$$A(jw) = \frac{V_o}{V_i}(jw) = -\frac{R_f}{R_1}\frac{jwC_1R_1}{(1 + jwC_1R_1)}$$

Amplificador pasa altos con frecuencia de corte en baja: $f_c = \frac{1}{2\pi R_1 C_1}$

Ganancia a frecuencias altas: $A_o = -\frac{R_f}{R_1}$

Impedancia de entrada a frecuencias altas: R_1

Amplificador no Inversor de C.A.

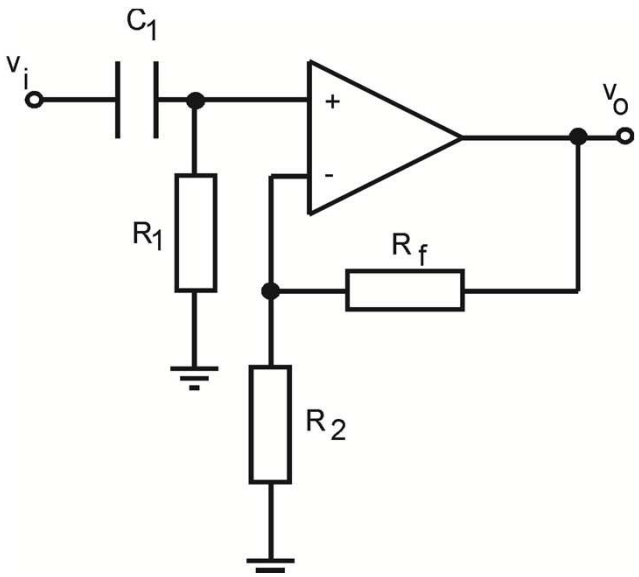

$$A(jw) = \frac{V_o}{V_i}(jw) = -\left(1 + \frac{R_f}{R_2}\right)\frac{jwC_1R_1}{(1 + jwC_1R_1)}$$

Ganancia a frecuencias altas: $A_o = 1 + \frac{R_f}{R_2}$

Frecuencia de corte en baja: $f_c = \frac{1}{2\pi R_1 C_1}$

Impedancia de entrada a frecuencias altas: R_1

Amplificador no Inversor de C.A. con alta impedancia de entrada

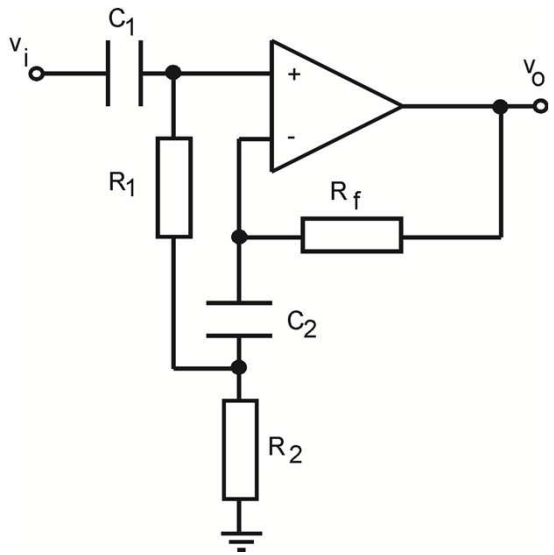

$$A(s) = \frac{sC_1(R_1 + R_2)\left(1 + sC_2R_1\frac{(R_f + R_2)}{(R_1 + R_2)}\right)}{1 + sC_1(R_1 + R_2) + s^2C_1C_2R_1R_2}$$

A frecuencias altas, la caída sobre R_1 será prácticamente nula, por lo tanto presenta una elevada impedancia de entrada

Ganancia a frecuencias altas: $A_o = 1 + \frac{R_f}{R_2}$

Si $R_f = 0$, seguidor de C. A. con alta impedancia de entrada.

Filtro Pasa Banda

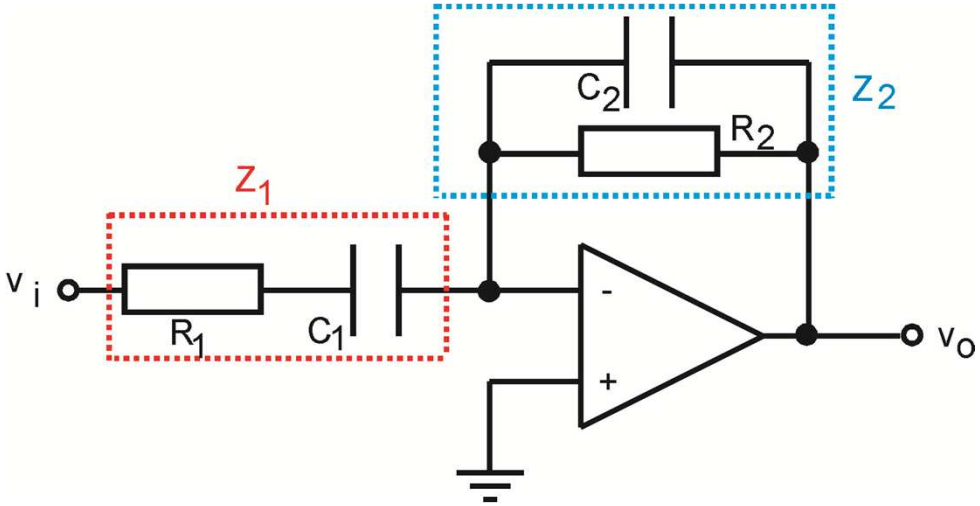

$$Si \quad w_1 = \frac{1}{C_1 R_1} \quad , \quad w_2 = \frac{1}{R_2 C_2} \quad y \quad w_2 > w_1$$

$$\boxed{A(s) = -\frac{R_2}{R_1}\frac{sC_1R_1}{(1+sC_1R_1)(1+sC_2R_2)}}$$

Filtro Sallen-Key de 2do orden

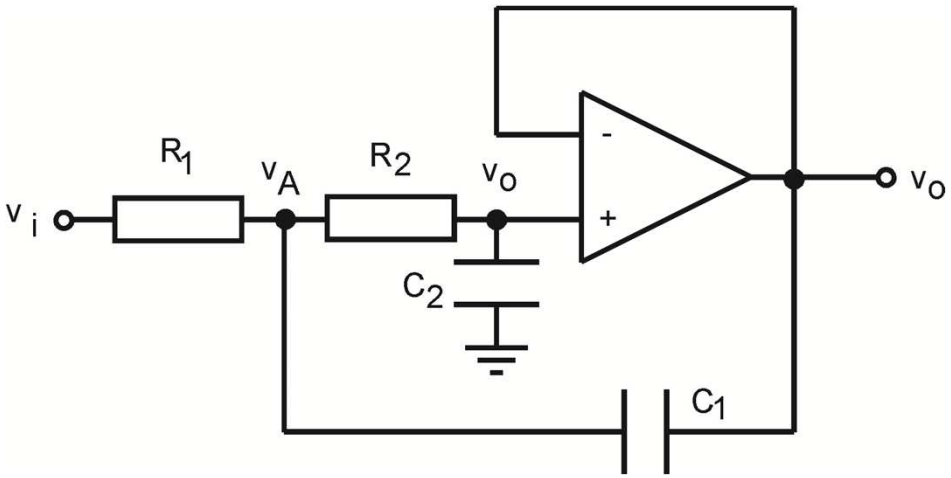

$$\begin{cases} V_o = \dfrac{V_A}{1 + sC_2R_2} \\ \dfrac{V_A - V_i}{R_1} + (V_A - V_o)sC_1 + V_o sC_2 \end{cases}$$

$$\boxed{A(s) = \frac{V_o}{V_i}(s) = \frac{1}{1 + sC_2(R_1 + R_2) + s^2C_1C_2R_1R_2}}$$

Girador de impedancia

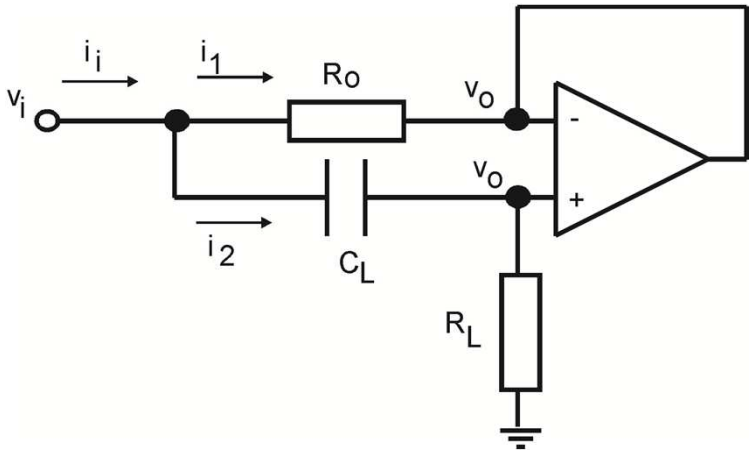

$$I_i = I_1 + I_2 \quad , \quad I_1 R_o = \frac{I_2}{jwC_L}$$

$$I_i = I_2\left(1 + \frac{1}{jwR_oC_L}\right)$$

$$Z_i = \frac{V_i}{I_i} = \frac{I_2\left(R_L + \frac{1}{jwC_L}\right)}{I_2\left(1 + \frac{1}{jwR_oC_L}\right)} = \frac{R_o}{(1 + jwR_oC_L)}(1 + jwC_LR_L)$$

A frecuencias donde $R_o \ll 1/wC_L$:

$$Z_i \cong R_o + jwL_{eq}$$

Con:

$$L_{eq} = C_LR_LR_o$$

Girador de impedancia

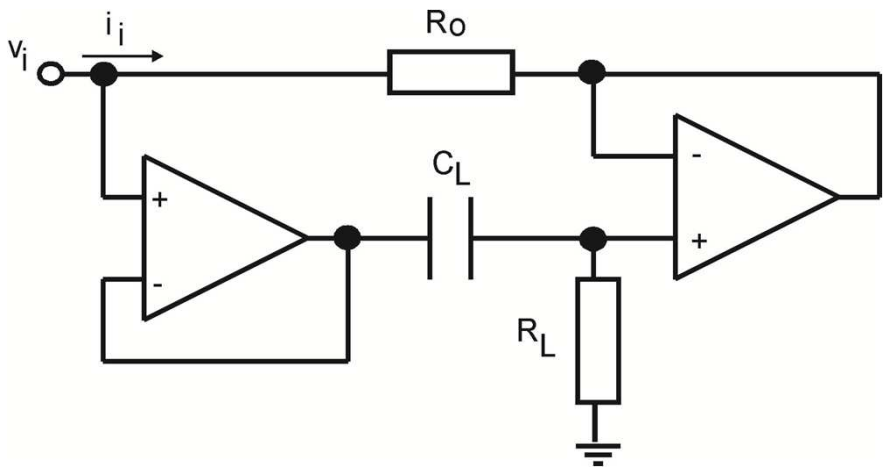

$$I_i R_o = \frac{\frac{1}{jwC_L}}{R_L + \frac{1}{jwC_L}} V_i = \frac{V_i}{1 + jwC_L R_L}$$

$$\boxed{Z_i = \frac{V_i}{I_i} = R_o(1 + jwC_L R_L) = R_o + jwL_{eq}}$$

Con: $\boxed{L_{eq} = C_L R_L R_o}$

Multiplicador capacitivo

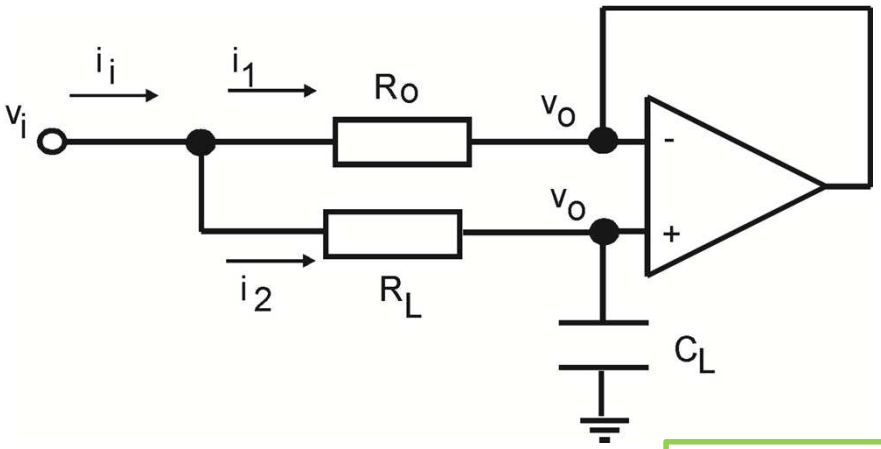

$$I_i = I_1 + I_2 \quad , \quad I_1 R_o = I_2 R_L$$

$$I_i = I_2\left(1 + \frac{R_L}{R_o}\right)$$

$$\boxed{Z_i = \frac{V_i}{I_i} = \frac{I_2\left(R_L + \frac{1}{jwC_L}\right)}{I_2\left(1 + \frac{R_L}{R_o}\right)} = R_o \| R_L + \frac{R_o}{jwC_L(R_o + R_L)}}$$

Si $R_o \ll R_L$: $\boxed{Z_i \cong R_o + \frac{1}{jwC_{eq}}}$

Con: $\boxed{C = C_L \frac{R_L}{R_o}}$

Aplicaciones no lineales. Diodo de precisión

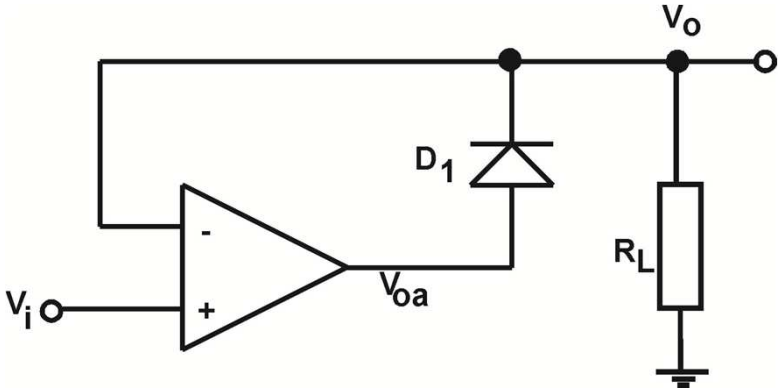

$Para\ V_i > 0\ \ el\ diodo\ D_1\ conduce\ si$:

$$V_{oa} = a_v V_i > V_\gamma \rightarrow V_i > \frac{V_\gamma}{a_v}$$

$$V_o = V_i$$

$Para\ V_i < 0\ el\ diodo\ D_1\ no\ conduce$

$$V_o = 0$$

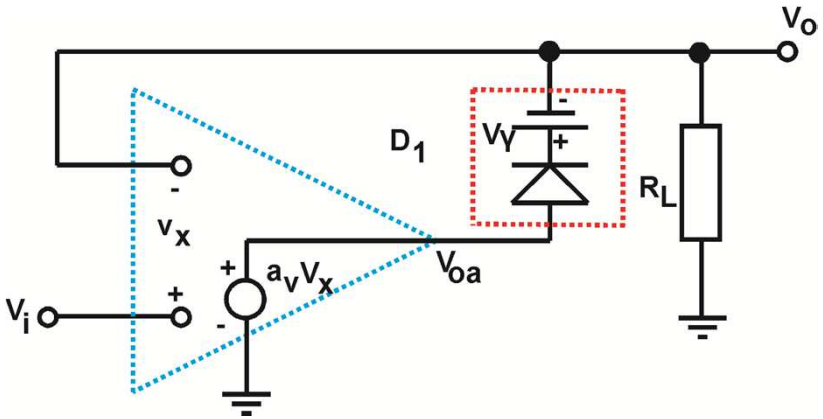

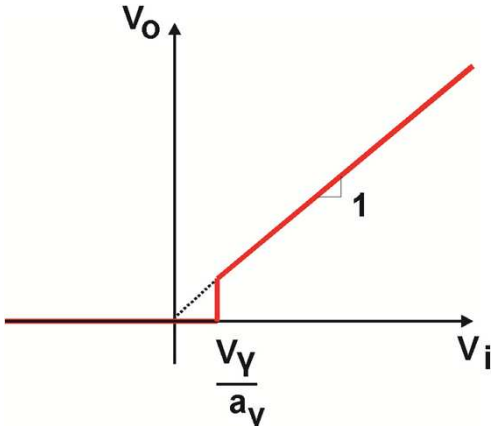

Aplicaciones no lineales. Rectificador de onda completa

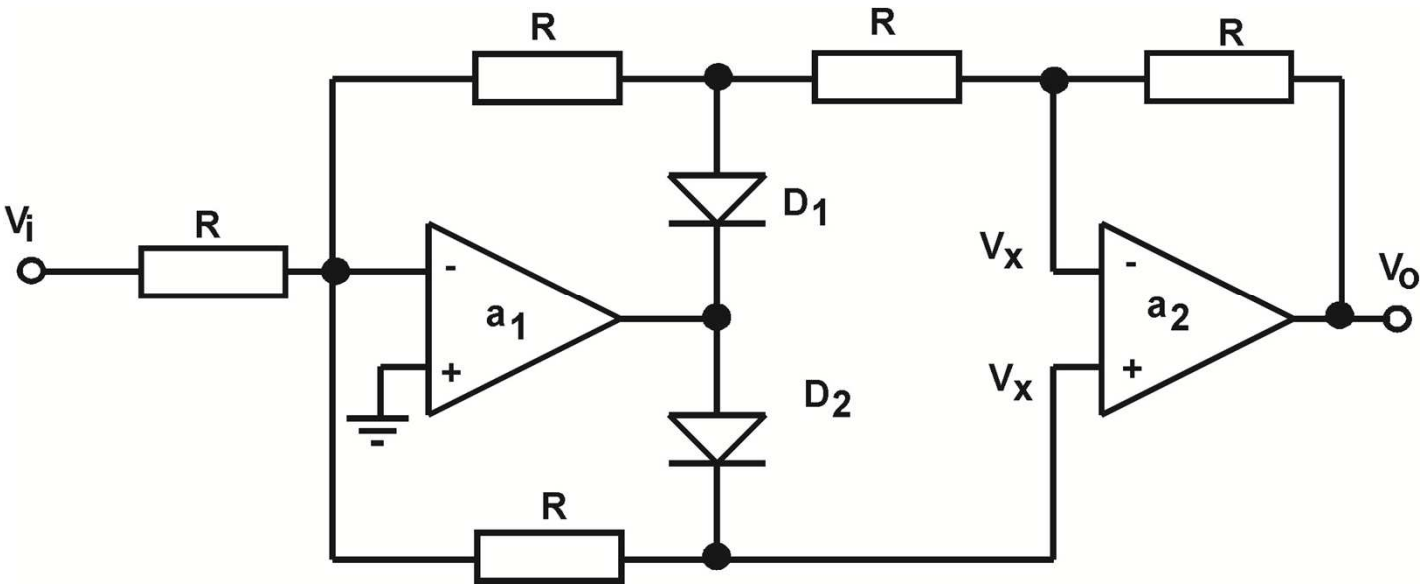

Aplicaciones no lineales. Rectificador de onda completa

$$Para\ V_i > 0 \quad D_1\ \ conduce\ y\ D_2\ \ cortado \quad \rightarrow \quad \boxed{V_o = V_i}$$

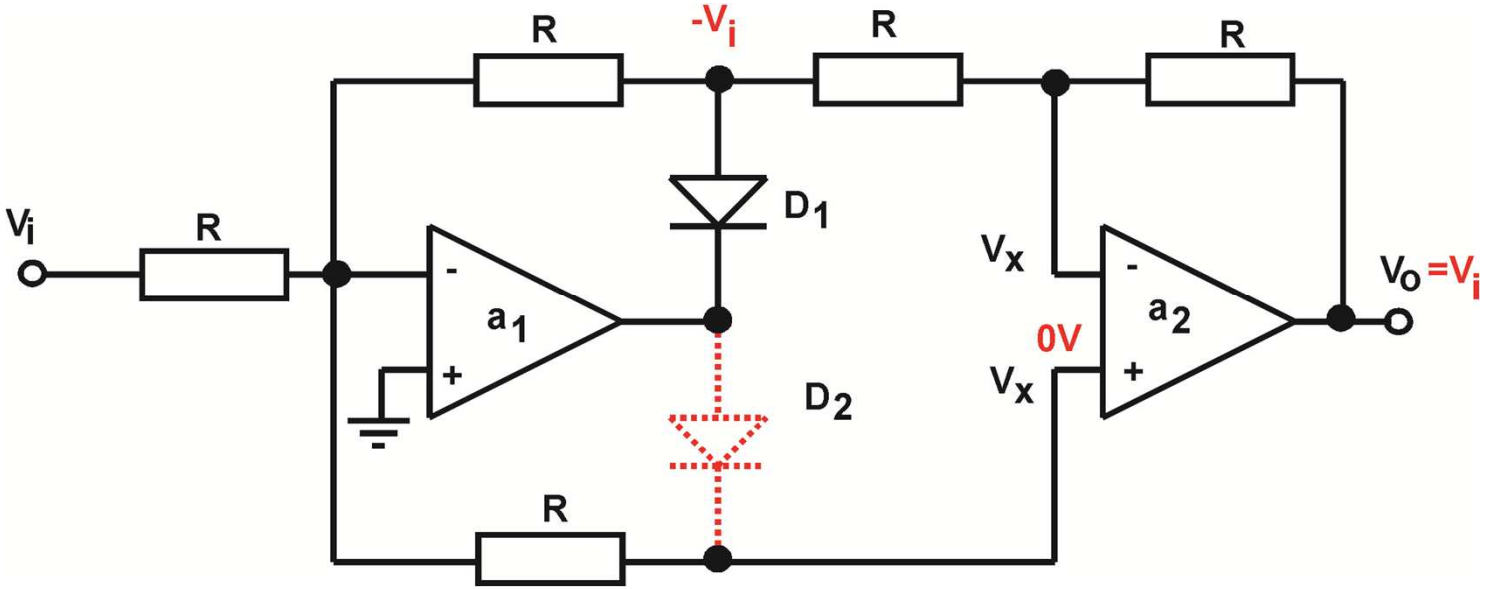

Aplicaciones no lineales. Rectificador de onda completa

$Para\ V_i < 0 \quad D_2\ conduce\ y\ D_1\ cortado$

$$\frac{V_i}{R} + \frac{V_x}{2R} + \frac{V_x}{R} = 0 \quad \rightarrow \quad V_x = -\frac{2}{3}V_i \quad Como\ V_o = \frac{V_x}{2R}3R \quad \rightarrow \quad \boxed{V_o = -V_i}$$

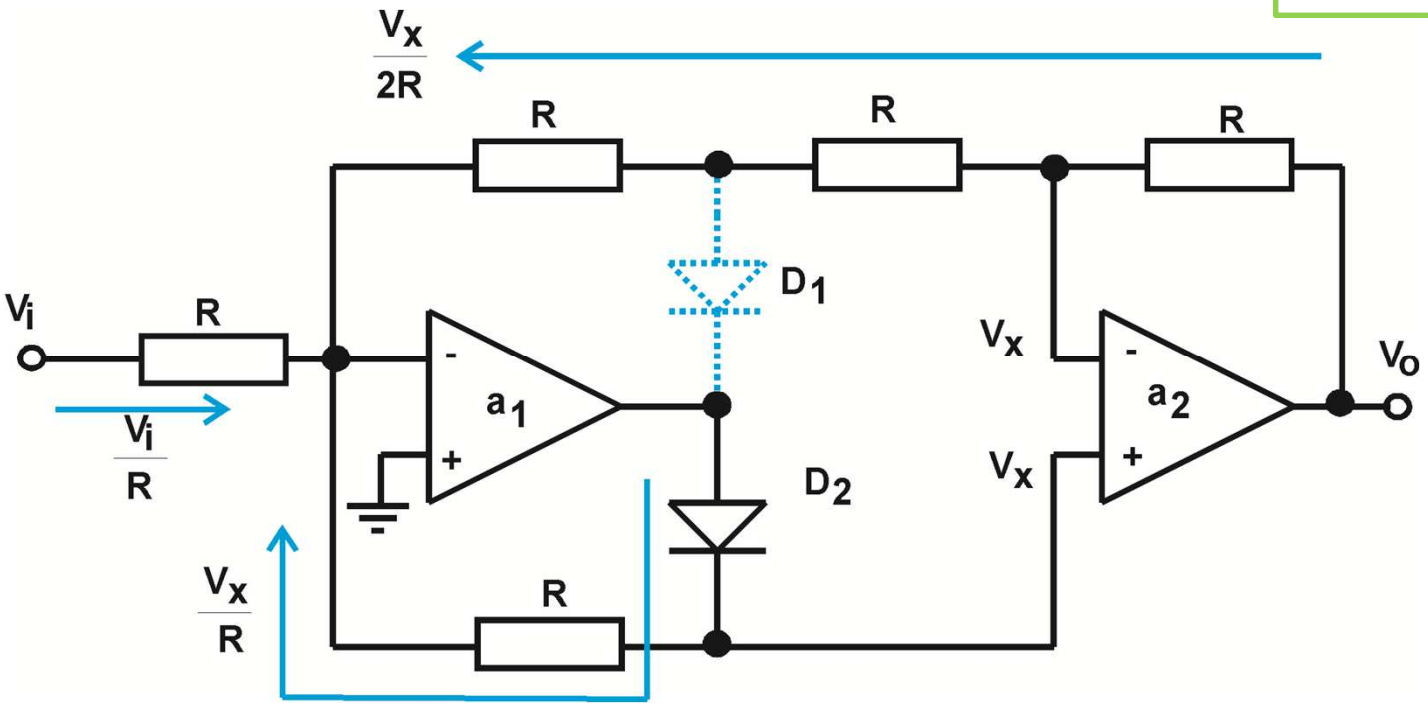

Aplicaciones no lineales. Rectificador de onda completa

$$V_o = |V_i|$$

Rectificador de onda completa

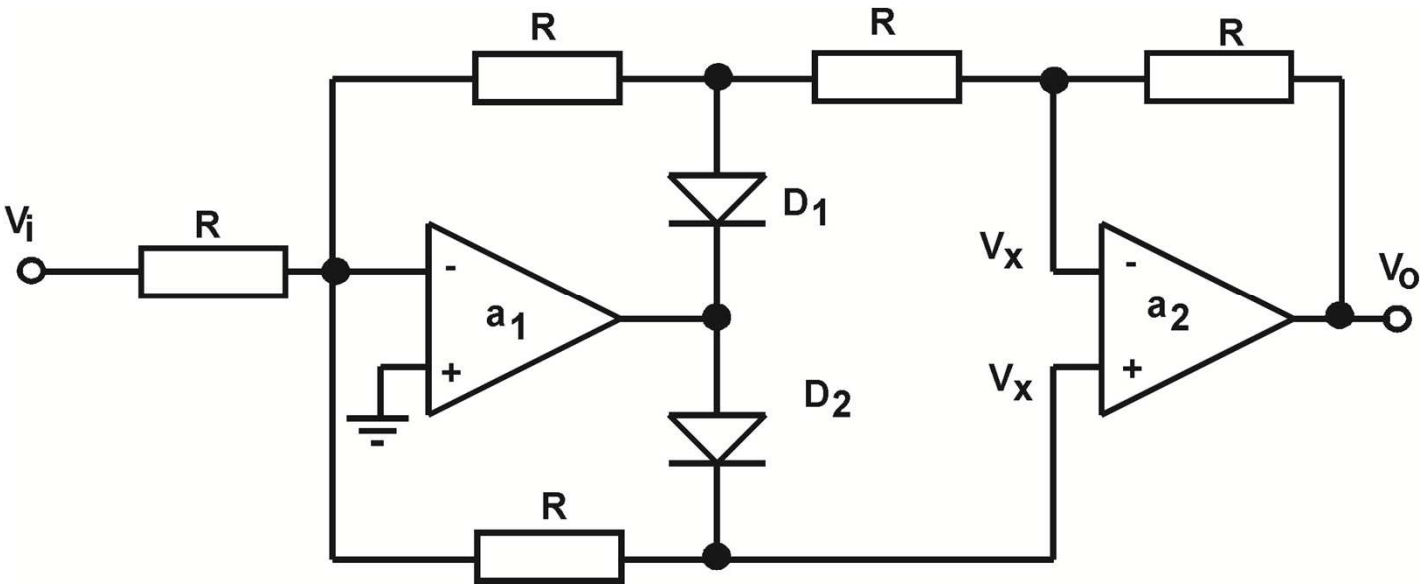

Detector de picos positivos

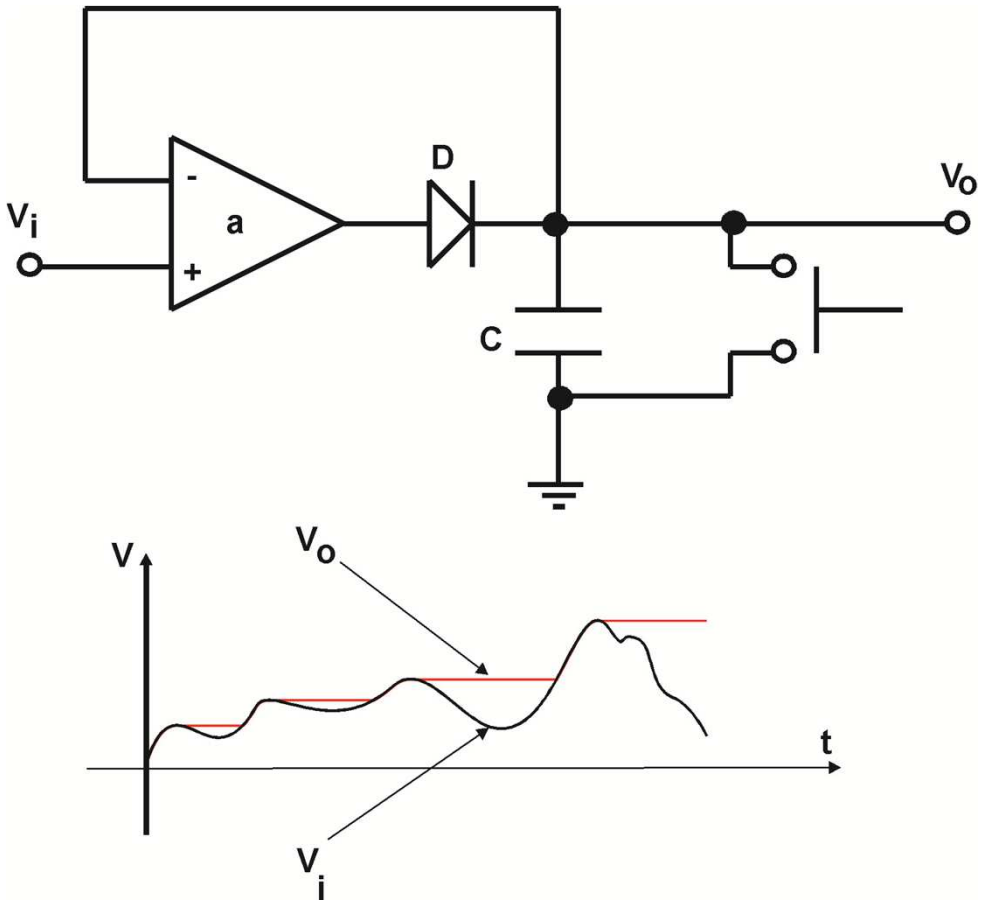

El diodo sólo permite la carga del capacitor, por lo tanto se mantiene el máximo alcanzado hasta el reinicio del pulsador

Limitador de tensión

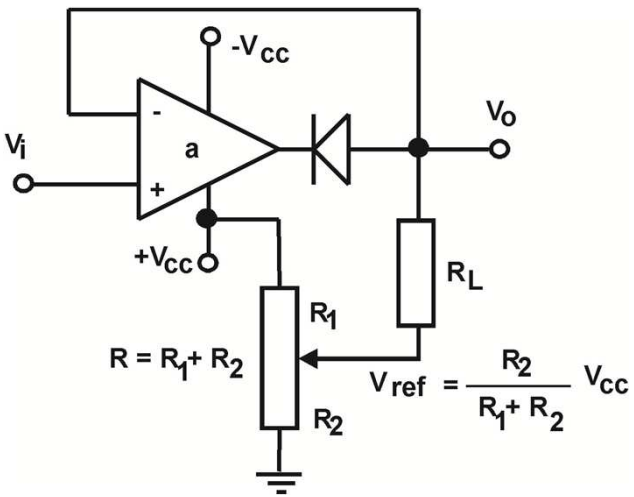

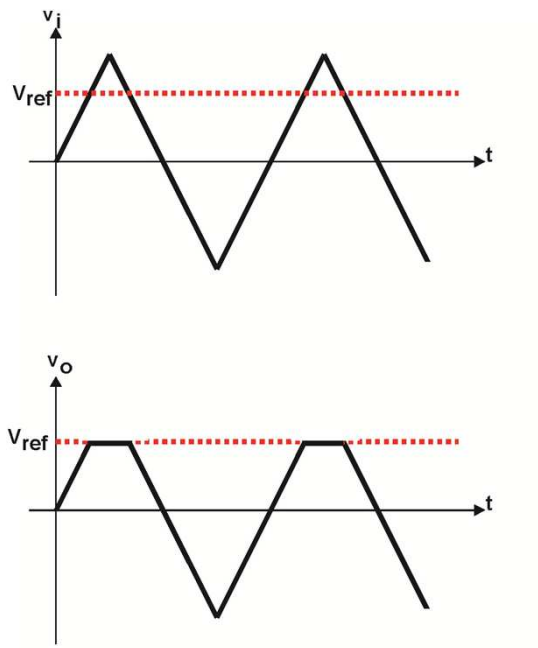

$$Si \quad V_i < V_{ref} \quad \rightarrow \boxed{V_o = V_i} \quad , \qquad cuando \quad V_i \geq V_{ref} \quad \rightarrow \boxed{V_o = V_{ref}}$$

Amplificadores logarítmico y antilogarítmico

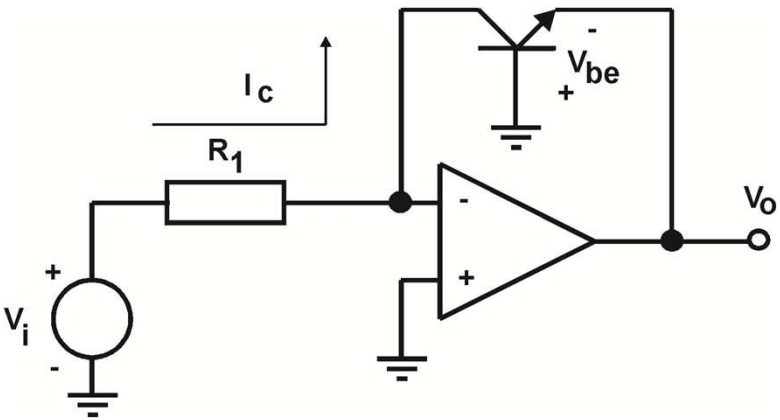

$$I_c \cong I_S e^{\frac{qV_{be}}{kT}} \quad , \qquad I_c = \frac{V_i}{R_1} \;\; y \;\; V_o = -V_{be}$$

$$\boxed{V_o \cong -\frac{kT}{q}\ln\left(\frac{V_i}{R_1 I_S}\right)}$$

Logarítmico

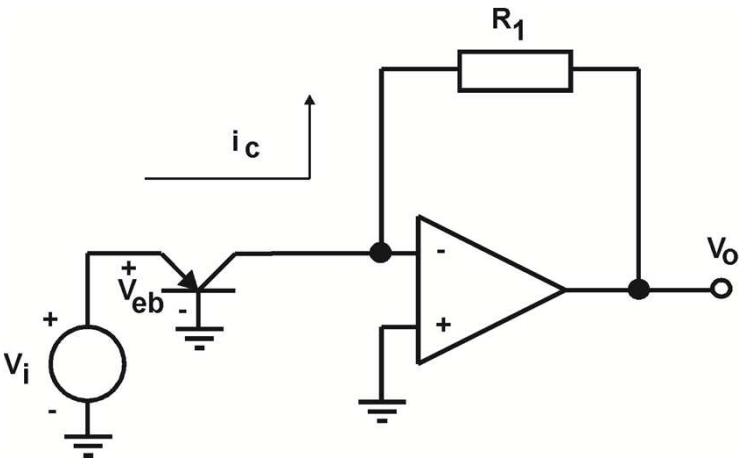

$$I_c \cong I_S e^{\frac{qV_{be}}{kT}} \;\; y \;\; V_o = -I_c R_1$$

$$\boxed{V_o \cong -I_S R_1 e^{\frac{qV_{be}}{kT}}}$$

Antilogarítmico

$$V_{ref} = I_S R_1$$

Convertidores corriente-tensión

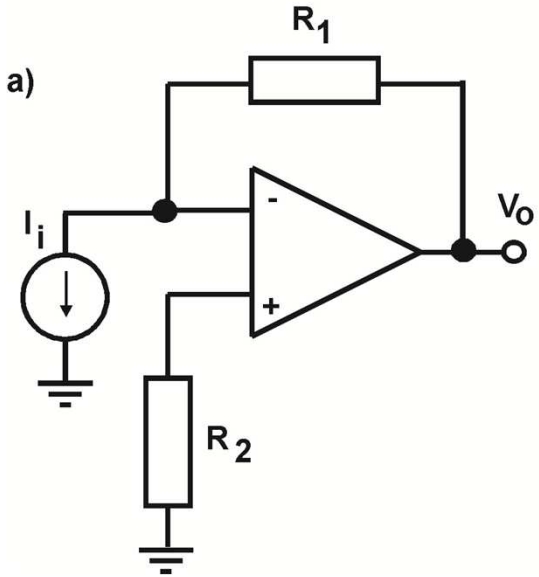

Convertidor corriente-tensión

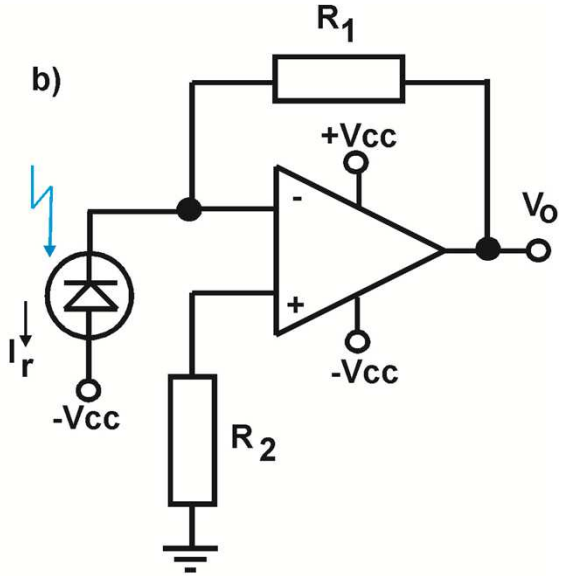

Amplificador de fotodiodo

$$V_o = I_i R_1$$

$$V_o = I_r R_1$$

$R_1 = R_2$ para minimizar deajuste

Fuentes de corriente

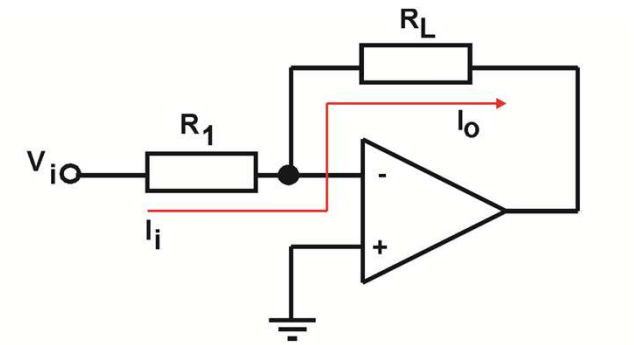

$$I_i = I_o = \frac{V_i}{R_1}$$ *independiente de* R_L

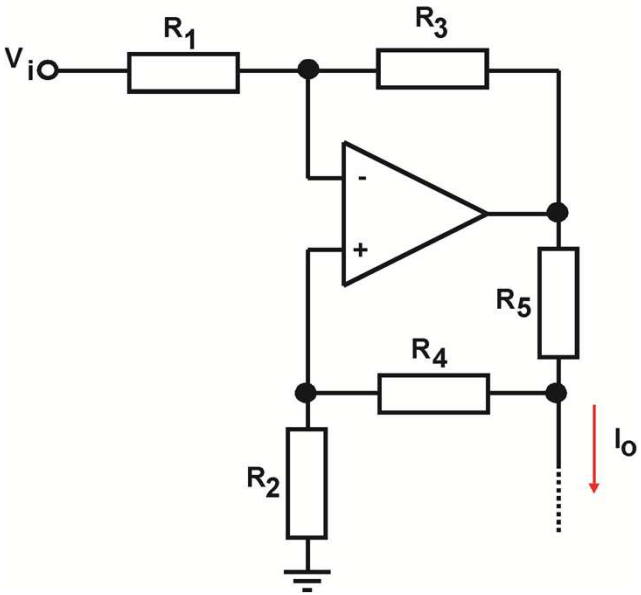

$$Si \quad R_1 = R_2 \quad y \quad R_3 = R_4 + R_5$$

$$I_0 = -\frac{R_3 V_i}{R_1 R_5}$$

Transferencia lineal por tramos

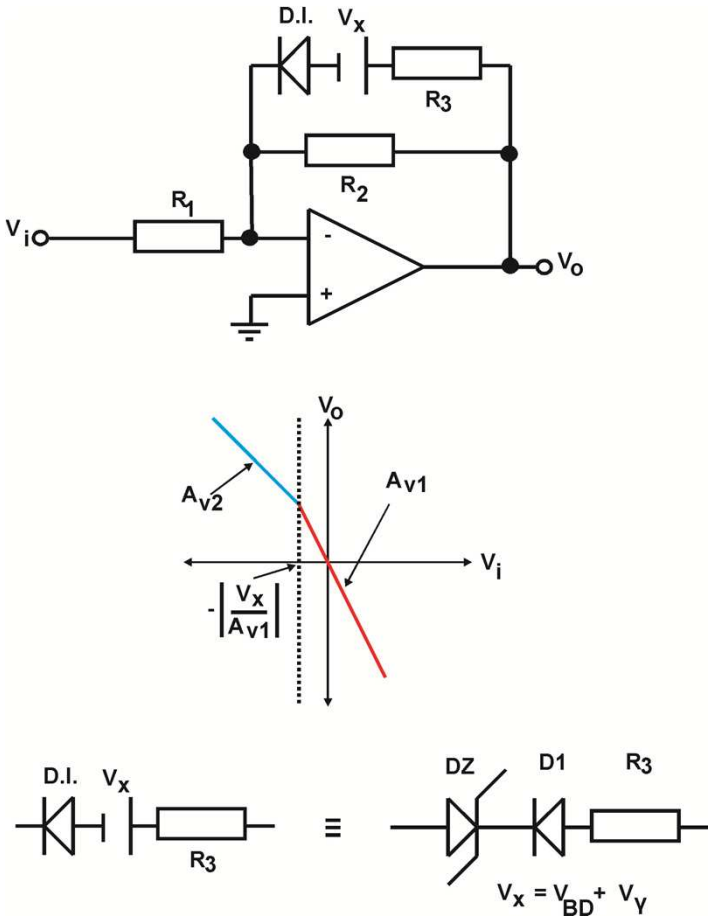

$$A_{v1} = -\frac{R_2}{R_1}$$

$$A_{v2} = -\frac{R_2 \| R_3}{R_1}$$

Transferencia lineal por tramos

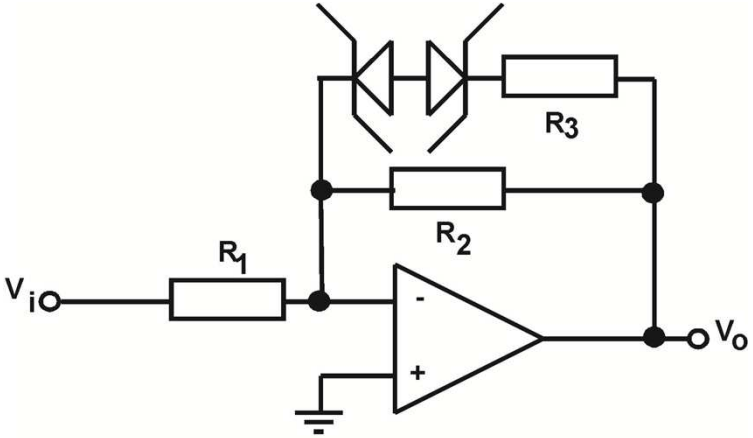

$$A_{v1} = -\frac{R_2}{R_1}$$

$$Para \quad |V_i| < \left|\frac{V_x}{A_{v1}}\right|$$

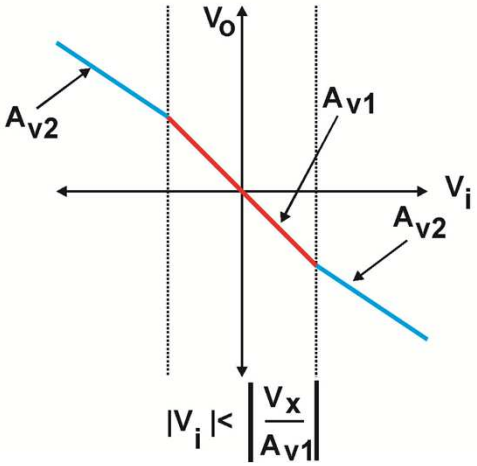

$$A_{v2} = -\frac{R_2 \| R_3}{R_1}$$

$$Para \quad |V_i| > \left|\frac{V_x}{A_{v1}}\right|$$

$$Con \quad V_x = V_{BD} + V_\gamma$$

Comparadores

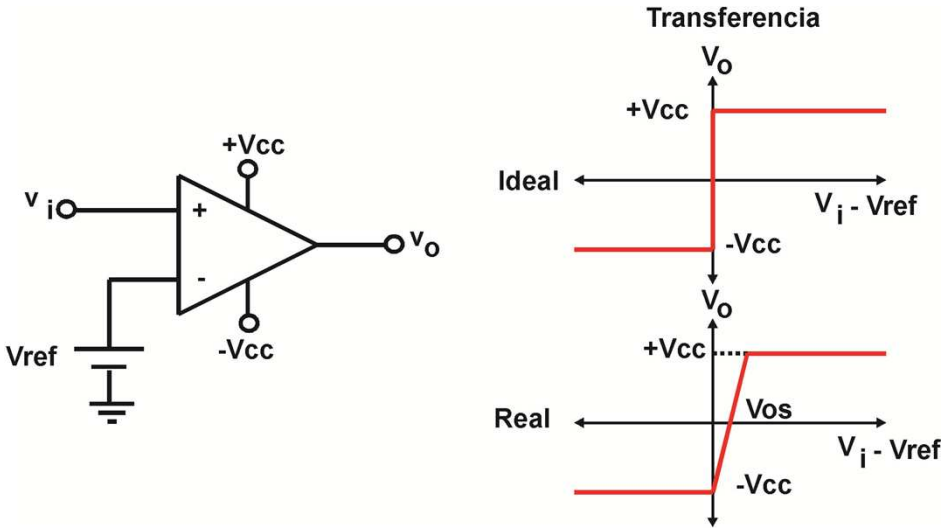

Debido a su gran ganancia, un AO a lazo abierto se comporta como un comparador de tensión, cuando:

$$V_i > V_{ref} \rightarrow V_o \approx V_{cc}$$

$$\text{y si } V_i < V_{ref} \rightarrow V_o \approx -V_{cc}$$

Los AOs en general están compensados internamente, lo que retarda su transición. Para aplicaciones que requieran transiciones rápidas se utilizan CIs específicos sin compensación interna, llamados Comparadores, y con niveles adaptados para trabajar con circuitos digitales.

Comparadores

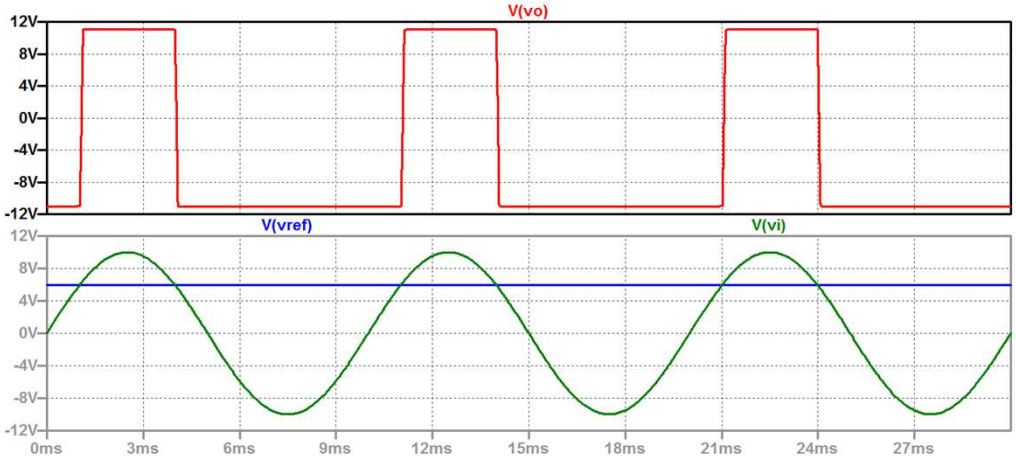

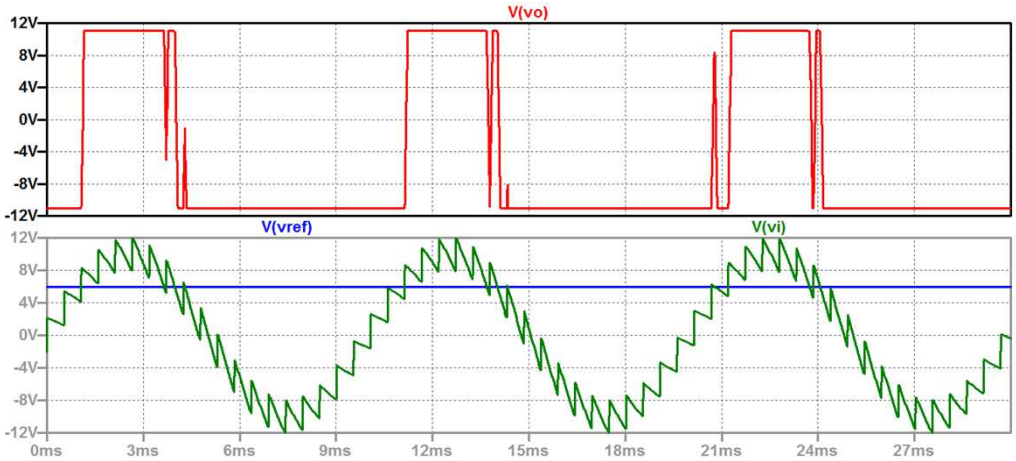

Comparadores con histéresis (Schmitt Trigger)

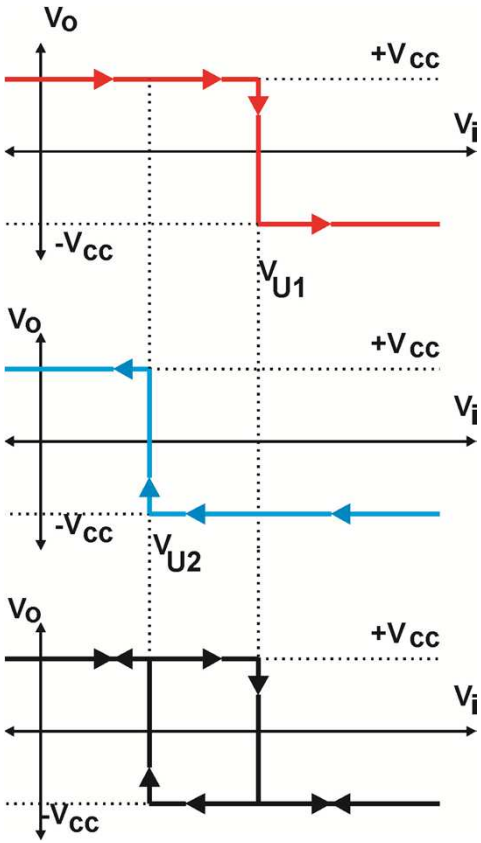

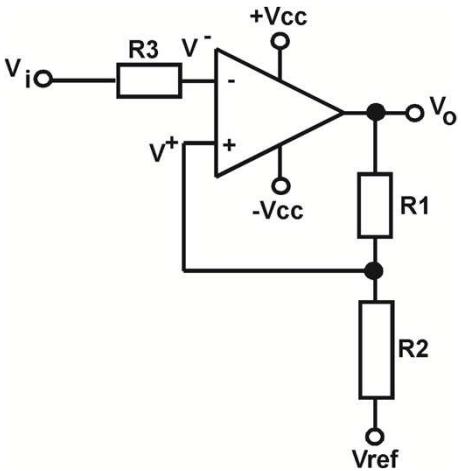

Umbrales de comparación

$$Para\ V_0 = +V_{CC} \rightarrow V_{U1} = V^+ = \frac{V_{CC}R_2}{R_1 + R_2} + \frac{V_{ref}R_1}{R_1 + R_2}$$

$$Para\ V_0 = -V_{CC} \rightarrow V_{U2} = V^+ = -\frac{V_{CC}R_2}{R_1 + R_2} + \frac{V_{ref}R_1}{R_1 + R_2}$$

Comparadores con histéresis (Schmitt Trigger)

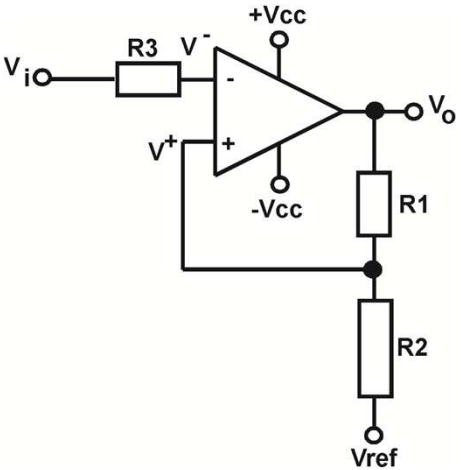

Diseño de la histéresis

$$\begin{cases} V_{central} = \dfrac{V_{U1} + V_{U2}}{2} = \dfrac{V_{ref} R_1}{(R_1 + R_2)} \\ \Delta U = V_{U1} - V_{U2} = \dfrac{2V_{CC} R_2}{R_1 + R_2} \end{cases}$$

Si tenemos una V_{CC} = 12V y queremos una $V_{central}$ = 5V y ΔU = 2V :

$$V_{U1} = V_{centrtal} + \frac{\Delta U}{2} \quad , \qquad V_{U2} = V_{central} - \frac{\Delta U}{2}$$

$$\rightarrow \boxed{R_1 = 11R_2} \quad y \quad \boxed{V_{ref} = 5{,}45V}$$

Comparadores con histéresis (Schmitt Trigger)

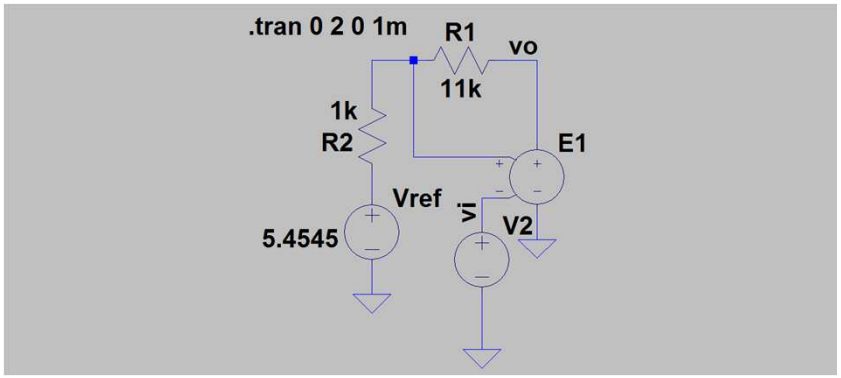

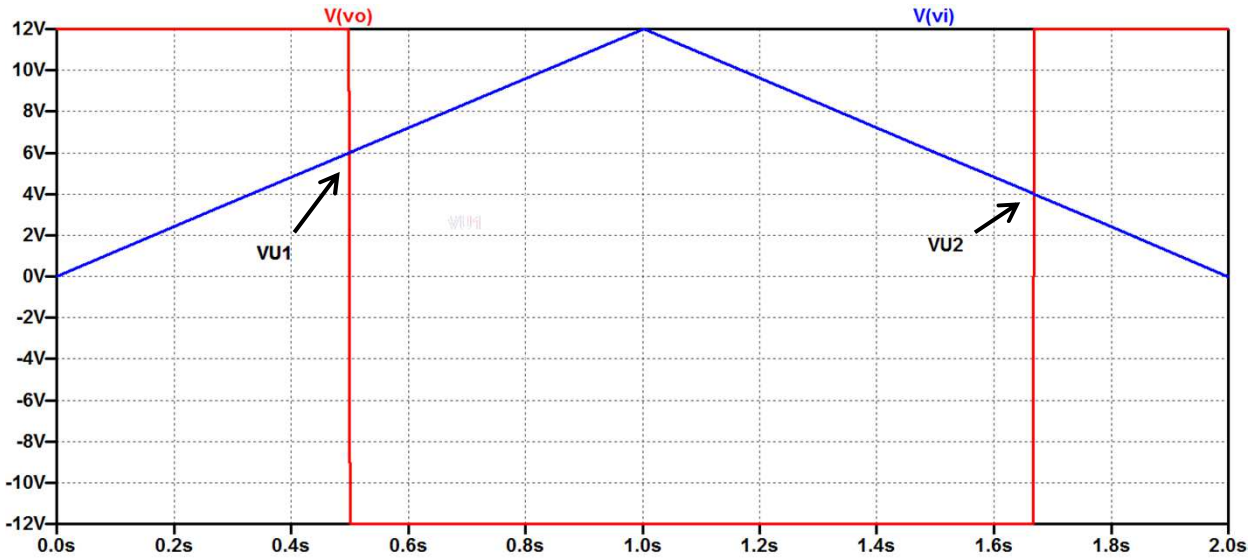

Generador de onda cuadrada

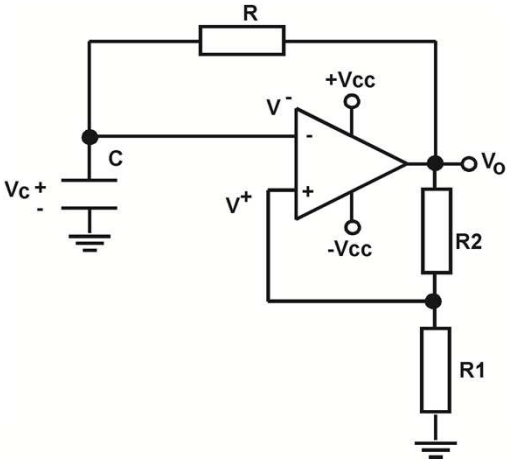

$$\tau = RC$$

$$V_U = V_{CC}\frac{R_1}{R_1 + R_2}$$

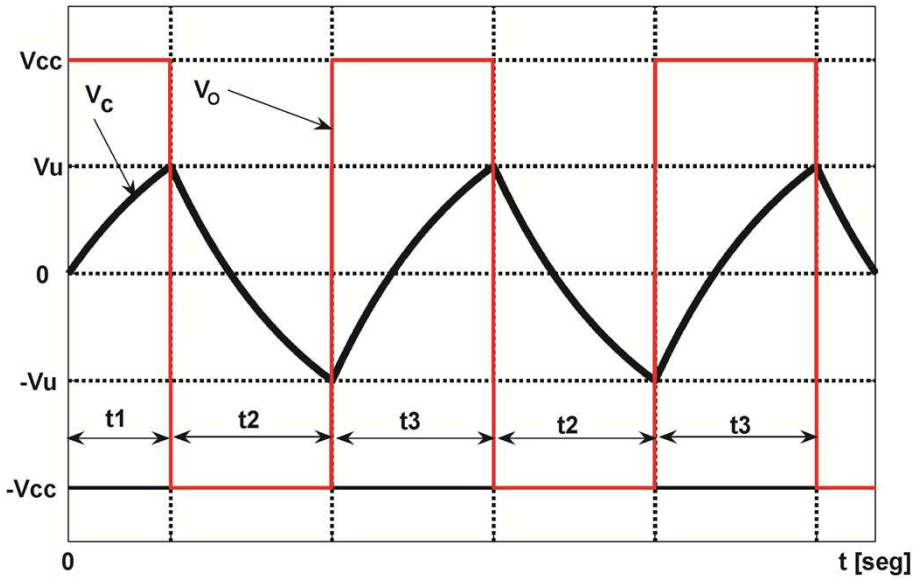

Descarga de C: $t' = t - t_1$

$$V_c(t') = -V_{cc} + (V_U - V_{cc})e^{-\frac{t'}{\tau}}$$

$$V_c(t_2) = -V_U \rightarrow \boxed{t_2 = \tau \ln\frac{2R_1 + R_2}{R_2}}$$

Carga de C: $t'' = t' - t_2$

$$V_c(t'') = V_{cc} + (-V_U - V_{cc})e^{-\frac{t''}{\tau}}$$

$$V_c(t_3) = V_U \rightarrow \boxed{t_3 = \tau \ln\frac{2R_1 + R_2}{R_2}}$$

$$\boxed{f = \frac{1}{t_2 + t_3} = \frac{1}{2t_2}}$$

Generador de onda triangular

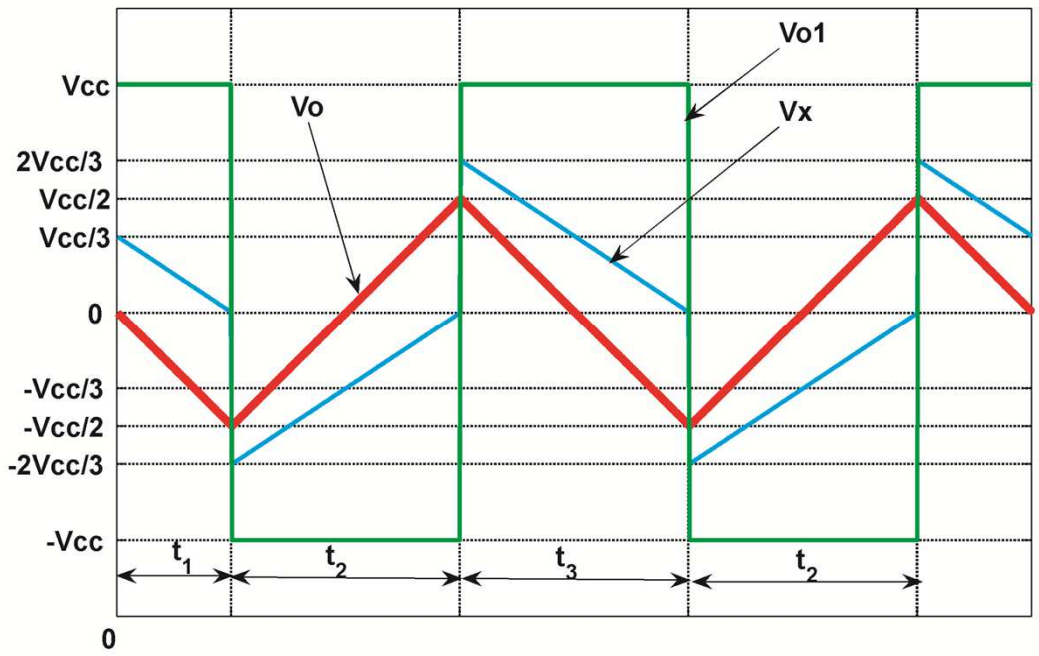

Comparador Integrador

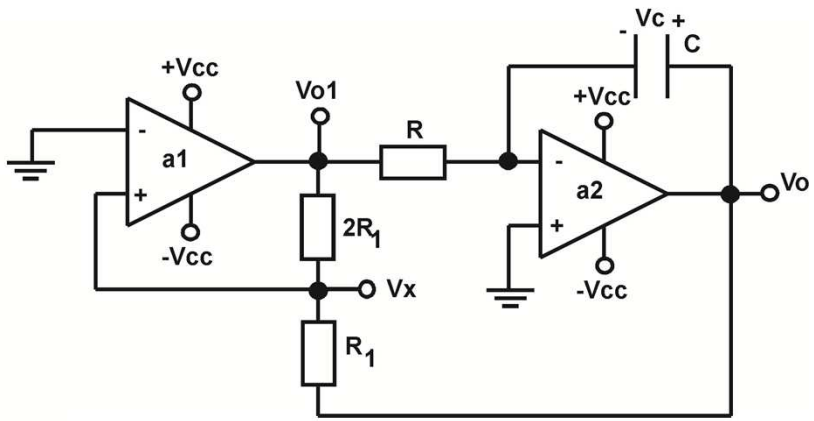

$$V_o(t) = -\frac{1}{RC}\int_t^t V_{o1}(t)dt + V_o(0)$$

$$V_x(t) = \frac{V_{o1}(t)}{3} + \frac{2}{3}V_o(t) \qquad V_U = 0V$$

Ciclo inicial: $V_o(t) = -\frac{V_{CC}}{RC}t \rightarrow V_x(t) = \frac{V_{CC}}{3} - \frac{2}{3}\frac{V_{CC}}{RC}t \rightarrow V_x(t_1) = 0 \rightarrow \boxed{t_1 = \frac{RC}{2}}$

Generador de onda triangular

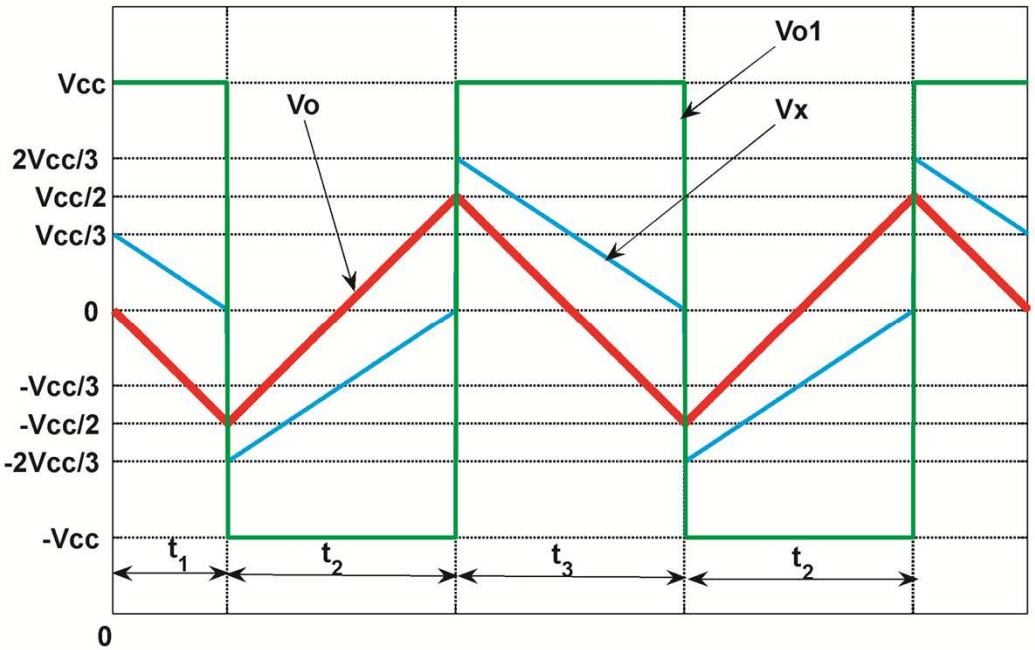

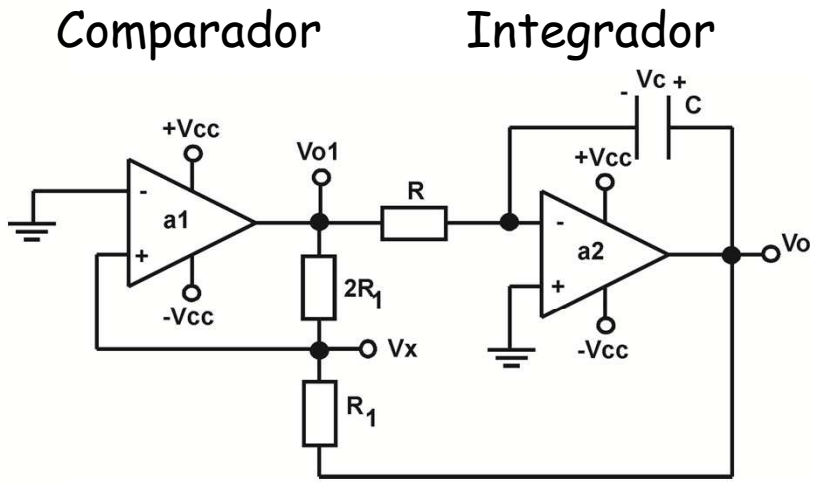

$$En\ \ t' = t - t_2 \ \rightarrow\ V_o(t' = 0) = -\frac{V_{CC}}{2}$$

$$V_o(t') = -\frac{V_{CC}}{2} + \frac{V_{CC}}{RC}t' \qquad V_x(t' = t_2) = 0 \qquad \rightarrow \qquad \boxed{t_2 = RC}$$

$$V_x(t') = -\frac{2}{3}V_{CC} + \frac{2}{3}\frac{V_{CC}}{RC}t' \qquad Por\ simetría\ \ t_3 = t_2 \qquad \rightarrow \qquad \boxed{f = \frac{1}{2t_2}}$$